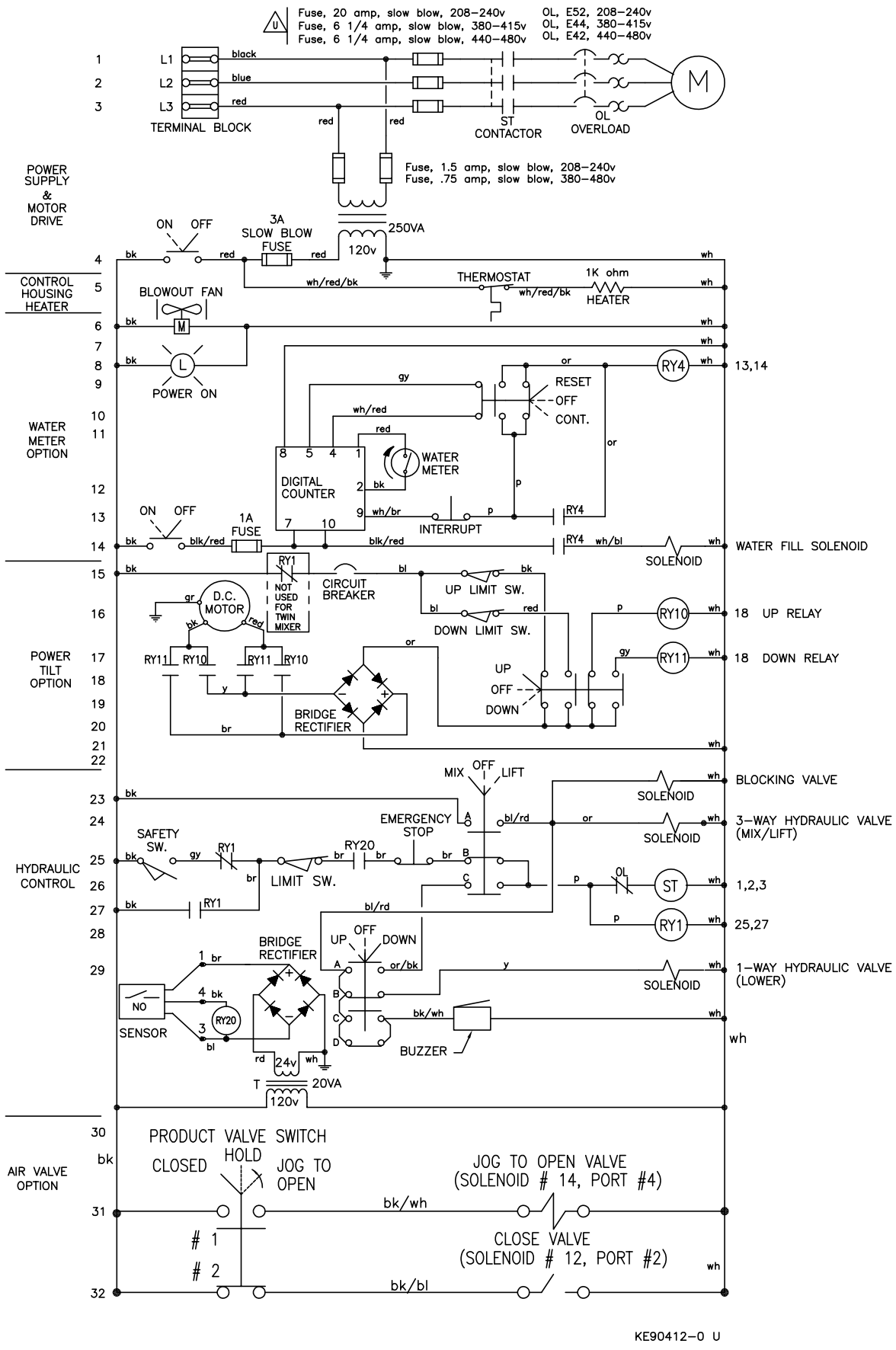

MAINTAINED, MAINTAINED, MOMENTARY

SWITCH	#1	#2	
CLOSED	O	X	
HOLD	O	O	
JOG TO OPEN	X	O	
CONTACT			

X = CLOSED
O = OPEN

MKDL–T or TMKDL–T HEAT WITHOUT CONTROL

KE90412–0