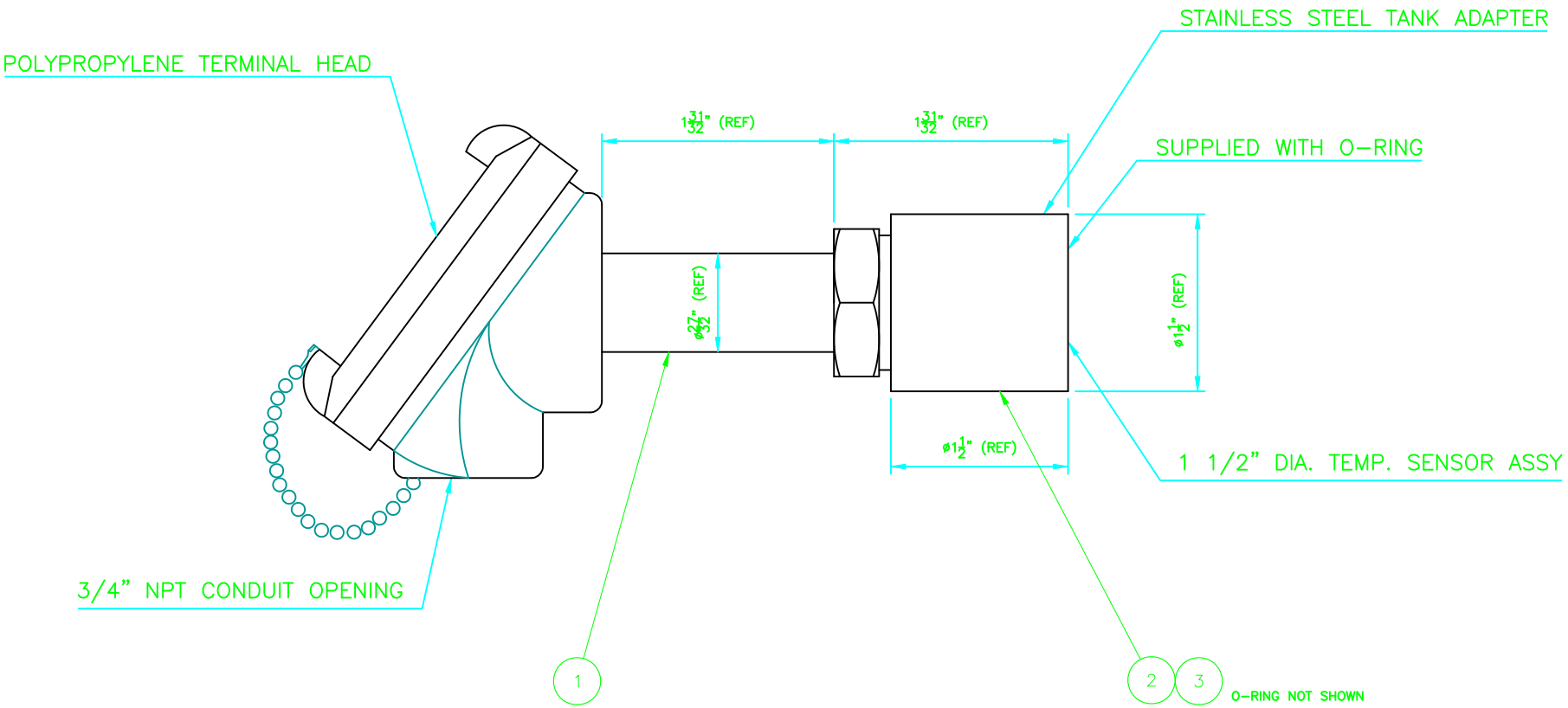

SERVICE PARTS				
ITEM	CR PART_#	PYROMATION PART_#	DESCRIPTION	QTY
1	KE54924-2	RBF185L3-STS-63	SENSOR MAIN BODY	1
2	KE54924-3	A035005	TANK MOUNTING ADAPTOR	1
3	FA05002-23	460159	SENSOR O-RING	1

VENDOR: PYROMATION INC.
ASSEMBLY SPEC #RBF185L3-STA-63
NOTE: ELEMENT IS A 100 OHM PLATINUM RTD, 3-WIRE CONSTRUCTION
INITIAL ACCURACY ±0.12% @ 0°C
NOMINAL TEMPERATURE COEFFICIENT 0.00385 OHM/OHM/°C

THIS DESIGN COVERS A PROPRIETARY ITEM AND IS THE PROPERTY OF CLEVELAND RANGE LTD.
THIS DRAWING IS NOT TO BE COPIED OR USED WITHOUT THE APPROVAL OF CLEVELAND RANGE LTD.

FOR GENERAL TOLERANCES REFER TO PWI-043

MATERIAL
TYPE & GRADE
FORM
SIZE
FINISH

CLEVELAND RANGE LTD.
8251 KEELE STREET, CONCORD, ONTARIO, CANADA

DO NOT SCALE PRINTED DRAWING

DRAWN BY

DATE 6/14/2005

TITLE TEMPERATURE SENSOR ASSEMBLY HA-MKGL/-T

SIZE A

DRAWING NO. KE54924-1.dwg

SHEET 1 OF 1

REV A