Visit www.clevelandrange.com to locate a service or sales representative in your area.

Cleveland

Direct Steam Vertical Mixer Kettles

Parts Manual

This manual is updated as new information and models are released. Visit our website for the latest manual.

Model #s -

(T) MKDL-40-T (-CC)
(T) MKDL-60-T (-CC)
(T) MKDL-80-T (-CC)
(T) MKDL-100-T (-CC)
(T) MKDL-125-T (-CC)
(T) MKDL-150-T (-CC)

For your future reference.

Model # _____

Serial # _____

Model # & Serial #.

Read the manual thoroughly.
Improper installation, operation or maintenance can cause property damage, injury or death.

Part # KE004015-21 A
October 2025

TABLE OF CONTENTS

HYDRAULIC COMPONENTS 4
PUMP AND MOTOR ASSEMBLY 7
HYDRAULIC FLOW CONTROL HARNESS 8
ELECTRICAL COMPONENT ASSEMBLY 9
REMOTE CONTROL ASSEMBLY 11
MAIN CONSOLE CONTROLS 12
WATER METER ASSEMBLY - 18" CONSOLE 13
COMPONENT PLATE ASSEMBLY - POWER TILT KETTLES 15
PRESSURE RELIEF VALVE, STEAM INLET VALVE & DRAIN COCK 15
BUTTERFLY VALVE, 3” (BV3) – KE52286 16
AIR VALVE ASSEMBLY (FPVA-3) – KE02281-1 16
AIR SOLENOID ASSEMBLY (FPVA-3) – KE02292 17
PLUMBING ASSEMBLY - 10” CONSOLE (40-80 gal.) – KE003729 18
PLUMBING ASSEMBLY - 12” CONSOLE (100-125 gal.) – KE003722 19
PLUMBING ASSEMBLY - 18" CONSOLE (40-80 gal.) – KE00723 20
PLUMBING ASSEMBLY - 18" CONSOLE (100-125 gal.) – KE00895 22
PLUMBING ASSEMBLY - 18" CONSOLE (150 gal.) – KE01418/KE01419 23
TRUNNION HOUSING ASSEMBLY – KE00699-1/KE01182-1 24
WIRING DIAGRAMS (consult factory for other wiring configurations) 25

Cleveland Range Ltd
8251 Keele Street
Concord, Ontario
L4K 1Z1
T 905 660 4747
www.clevelandrange.com

WARRANTY DISCLAIMER

Our Kettles, Mixers, Skillets, and Steamers are designed for commercial kitchen environments. To ensure optimal performance, longevity, and safety, the following conditions must be maintained:

- **Humidity & Moisture:** The equipment is designed to operate within standard commercial kitchen humidity levels of **40% to 65%** relative humidity. Prolonged exposure to humidity levels exceeding **65%** may compromise electrical components, cause condensation-related issues, and reduce equipment lifespan. Proper ventilation is essential to maintaining safe conditions.

- **Steam, Condensate & Water Exposure:** While the equipment can withstand occasional water splashes and steam exposure, direct and prolonged contact with high-pressure steam or continuous water spray may cause damage and void the warranty. Effective ventilation is required to manage steam buildup.

- **Ambient Temperature:** The recommended operating temperature range is **13°C (55°F) to 39°C (102°F)**. Exposure to temperatures beyond this range may impact performance, lead to malfunctions, or pose safety risks.

- **Ventilation Requirements:** Proper ventilation must be maintained to prevent excessive heat and humidity buildup, which can lead to overheating, reduced efficiency, and premature wear. Gas-fired equipment must only be installed under a ventilation hood in a room with adequate makeup air. Always consult local regulations to ensure compliance with ventilation standards.

- **Water Quality:** Follow Cleveland Range's water quality guidelines to ensure optimal equipment performance. Softening hard water reduces deposits, and filtration removes corrosive elements. Regular descaling, as recommended, prevents scale buildup. Consult a water treatment specialist and follow local regulations for proper management**.**

- **Installation and Preventive Maintenance:** Follow Cleveland Range's installation and preventive maintenance guidelines to ensure proper functioning and longevity of the units. Regular upkeep prevents issues and ensures optimal performance. Failure to follow the schedule may lead to reduced efficiency and breakdowns.

- **Drainage System:** Failure to follow Cleveland Range specifications may result in damage. Do not place a drain beneath the unit, as excessive moisture can shorten the lifespan of electrical and gas components, leading to potential malfunctions or hazards.

Failure to adhere to these conditions may result in decreased efficiency, equipment damage, or safety hazards and may void the manufacturer’s warranty.

FLOW PATH FOR HYDRAULIC SYSTEM

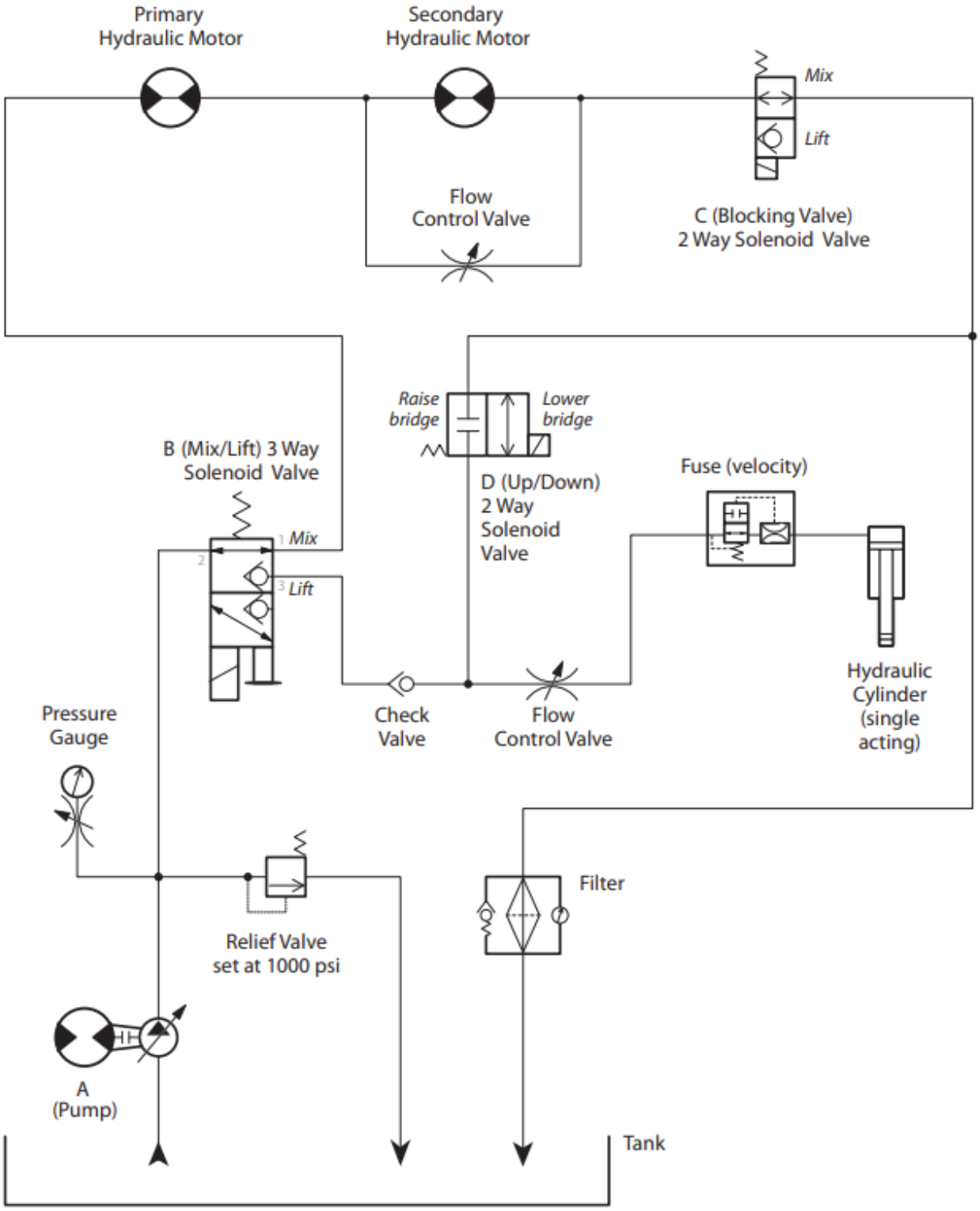

Switch	*Position*	*Valve Energized*			
		A (Pump)	**B** (Mix/Lift)	**C** (Blocking Valve)	**D** (Up/Down)
Lift/Mix	*Mix*	X			
	Off				
	Lift		X	X	
Up/Down	*Up*	X			
	Off				
	Down				X

HYDRAULIC COMPONENTS

(page 1 of 2)

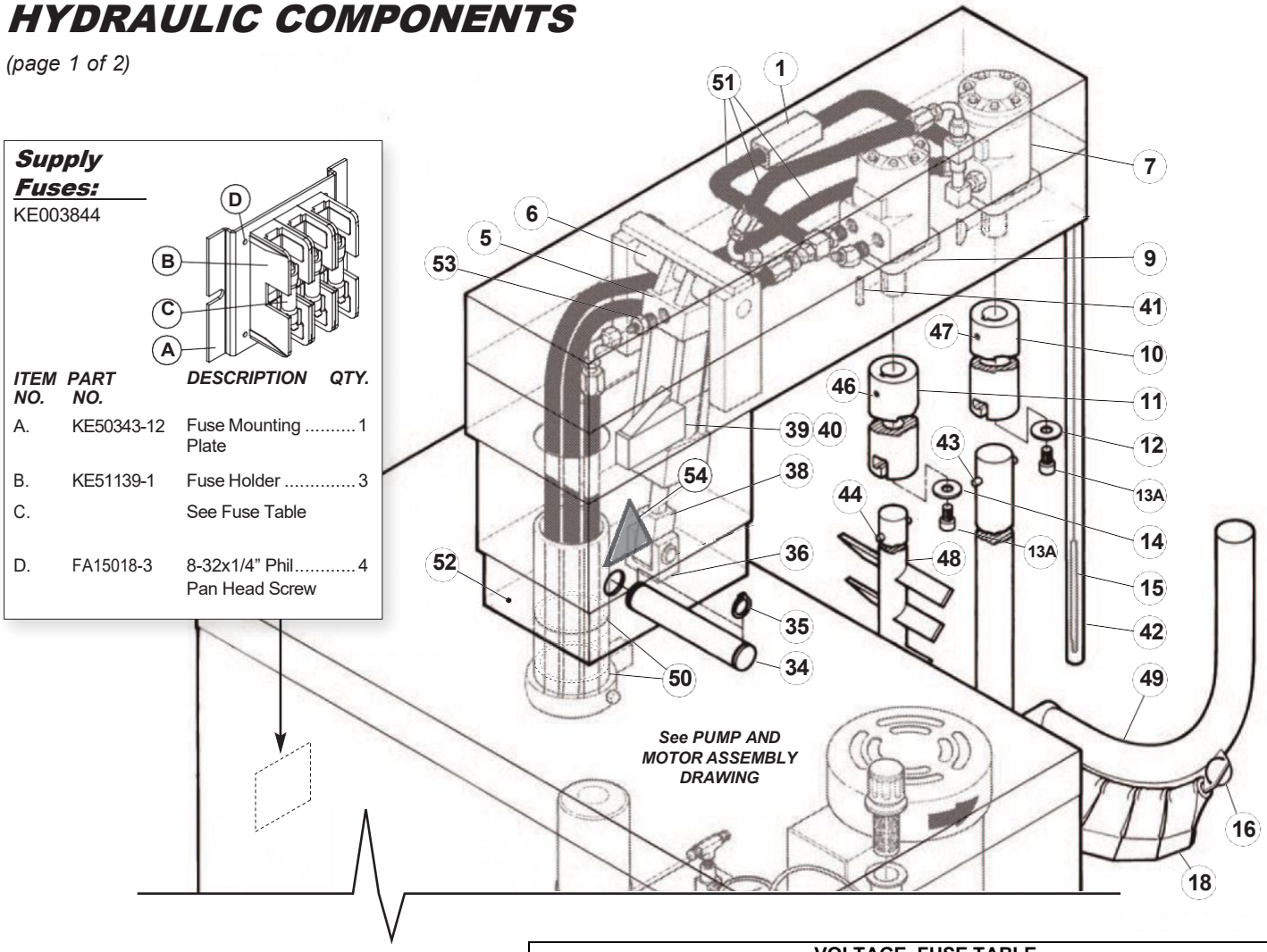

Supply Fuses:

KE003844

ITEM NO.	PART NO.	DESCRIPTION	QTY.
A.	KE50343-12	Fuse Mounting Plate	1
B.	KE51139-1	Fuse Holder	3
C.		See Fuse Table	
D.	FA15018-3	8-32x1/4" Phil Pan Head Screw	4

Scraper Blades:

KE51834

KETTLE SIZE - GAL.	QUANTITY
40	22
60	26
80	30
100	34
125	38
150	38

Baffle Arms:

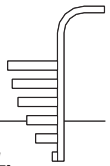

KETTLE SIZE - GAL.	
40	KE01682-1
60	KE01682-2
80	KE01682-3
100	KE01682-4
125	KE01682-5
150	KE01682-6

VOLTAGE, FUSE TABLE		
VOLTAGE	PART #	DESCRIPTION
208-240	KE52936-21	FUSE; 20A / 600V / SLOW BLOW / KLDR 20
380	KE52936-26	FUSE; 6 1/4A / 600V / SLOW BLOW / KLDR 6 1/4
440-480	KE52936-26	FUSE; 6 1/4A / 600V / SLOW BLOW / KLDR 6 1/4

Cooling Fan:

Fan	KE54860
Fan Cover	KE601236
Fan Guard	KE54861

Buzzer:

KE603849

used after April 2010

NOTE: For Hydraulic Hoses order Part No. RT00505 and specify length required

HYDRAULIC COMPONENTS *(page 2 of 2)*

ITEM NO.	PART NO.	DESCRIPTION	QTY.
1.	KE51607	Flow Control Valve	2
5.	KE51848	Jack	1
6.	KE52124-1	Jack Upper Pin	1
7.	KE51846	Hydraulic Motor, Scraper Arm, 40 gal.	1
	KE51938	Hydraulic Motor, Scraper Arm, 60-150 gal.	
9.	KE603736	Hydraulic Motor, Secondary Agitator, 40-150 gal. - used after August 2009	1
10.	KE51715	Main Coupling, Scraper Arm	1
11.	KE51716	Secondary Coupling, Agitator Arm	1
12.	KE603853-1	Coupling Washer, Primary S.S.	1
13A.	FA11286	Socket Head Screw, 1/4 X 20	2
14.	KE603853-2	Coupling Washer, Secondary S. S.	1
15.	CT50097	R.T.D. Probe Single (optional)	1
16.	KE53962	Blade Stop Ring	2
18.	KE51834	Scraper Blades	as required
34.	KE51622	Bridge Tilt Pin	1
35.	FA95007-10	Retaining Ring	1
36.	KE51623	Clevis Bracket	1
38.	KE51624	Knuckle Joint	1
39.	KE50295-1	Mounting Clip, Mercury Switch - used prior to August 2005	1
	KE602764	Mounting Clip, Limit Switch - used after to August 2005	
40.	SK2474500	Limit Switch - used after August 2005	1-2
41.	FA95055-4	Square Key	1
42.	KE003981-1	Housing, probe, 40 gal.	1
	KE003981-2	Housing, probe, 60 gal.	1
	KE003981-3	Housing, probe, 80 gal.	1
	KE003981-4	Housing, probe, 100 gal.	1
	KE003981-5	Housing, probe, 125 gal.	1
	KE003981-6	Housing, probe, 150 gal.	1
43.	KE51921	Pin, Scraper Arm	1
44.	KE51925	Pin, Secondary Agitator	1
46.	FA19506	Set Screw, Secondary Agitator	1
47.	FA19507	Set Screw, Scraper Arm	1
48.	KE00935	Secondary Agitator, 40 gal. (includes #44)	1
	KE00936	Secondary Agitator, 60 gal. (includes #44)	1
	KE00937	Secondary Agitator, 80 gal. (includes #44)	1
	KE00938	Secondary Agitator, 100 gal. (includes #44)	1
	KE00939	Secondary Agitator, 125 gal. (includes #44)	1
	KE00940	Secondary Agitator, 150 gal. (includes #44)	1
49.	KE00947	Primary Agitator, 40 gal., with Gallon Markings (includes #16, 18 & 43)	1
	KE00948	Primary Agitator, 60 gal., with Gallon Markings (includes #16, 18 & 43)	1
	KE00949	Primary Agitator, 80 gal., with Gallon Markings (includes #16, 18 & 43)	1
	KE00950	Primary Agitator, 100 gal., with Gallon Markings (includes #16, 18 & 43)	1
	KE00951	Primary Agitator, 125 gal., with Gallon Markings (includes #16, 18 & 43)	1
	KE00952	Primary Agitator, 150 gal., with Gallon Markings (includes #16, 18 & 43)	1
	KE00947-1	Primary Agitator, 40 gal., with Liter Markings (includes #16, 18 & 43)	1
	KE00948-1	Primary Agitator, 60 gal., with Liter Markings (includes #16, 18 & 43)	1
	KE00949-1	Primary Agitator, 80 gal., with Liter Markings (includes #16, 18 & 43)	1
	KE00950-1	Primary Agitator, 100 gal., with Liter Markings (includes #16, 18 & 43)	1
	KE00951-1	Primary Agitator, 125 gal., with Liter Markings (includes #16, 18 & 43)	1
	KE00952-1	Primary Agitator, 150 gal., with Liter Markings (includes #16, 18 & 43)	1
50.	KE52687	Roller Bearing	2
	KE52704	Thrust Washer, Brass	2
51.	RT00505	Hydraulic Hose	specify length
52.	KE00715	Bridge Swivel Housing Assembly	1
53.	KE603842	Velocity Fuse	1
54.	KE603825	Label, Hand Crush Warning	1

PUMP AND MOTOR ASSEMBLY

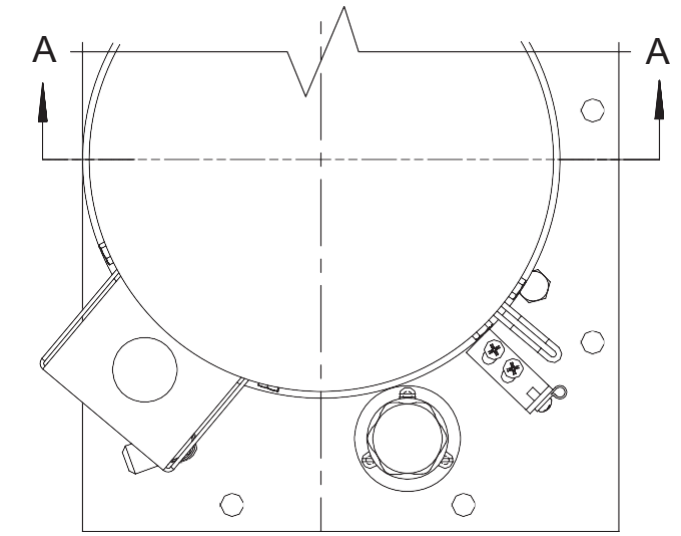

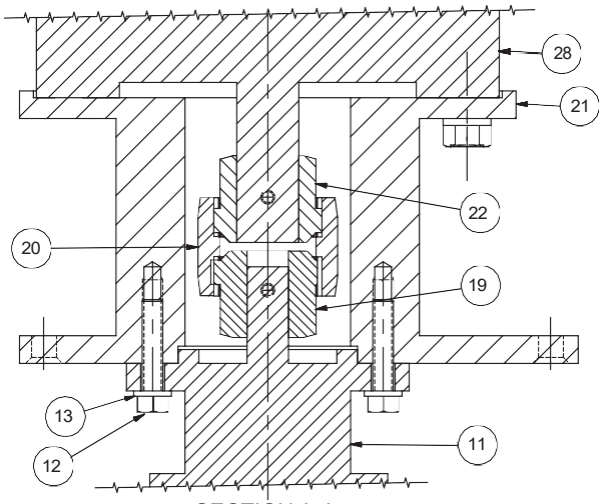

SECTION A-A

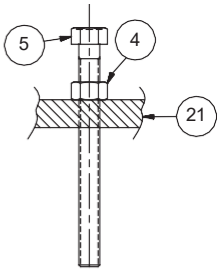

SECTION B-B

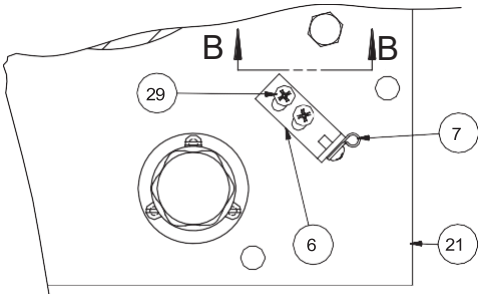

VIEW FROM D

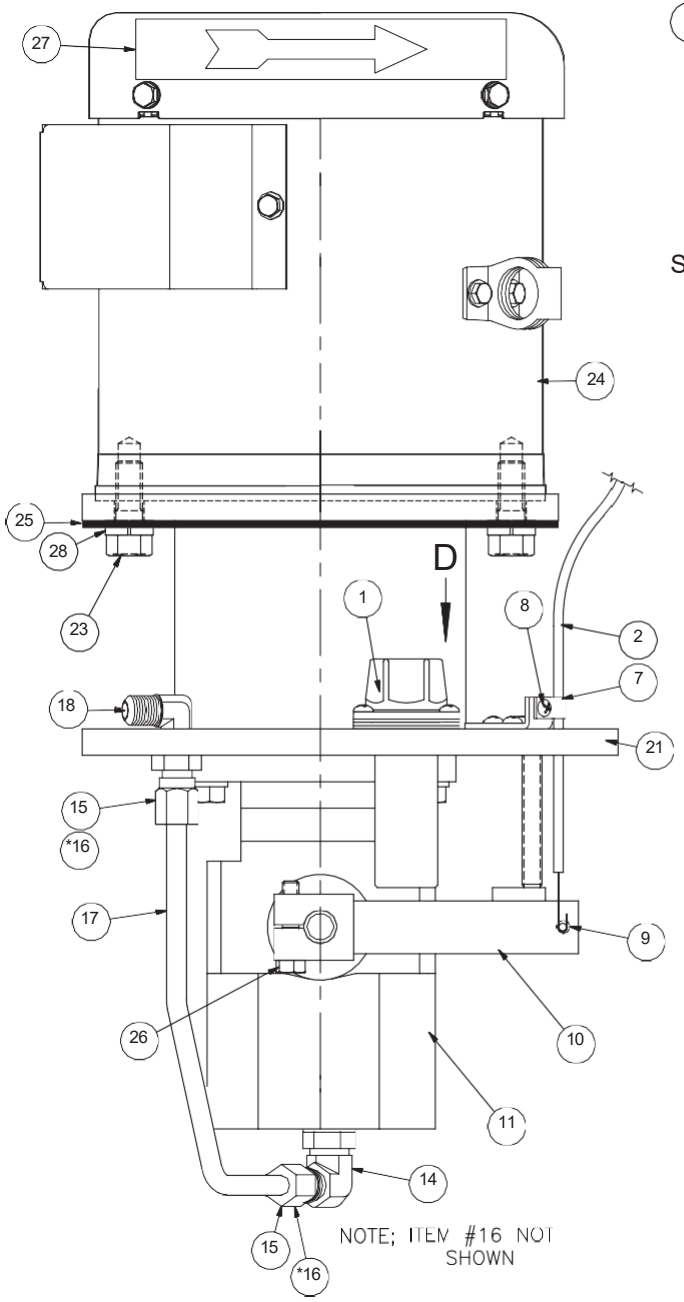

ITEM	QTY	PART NUMBER	DESCRIPTION
1	1	KE51889	FILTER & TANK BRETHER
2	1	KE00860	SPEED CONTROL CABLE & BRACKET ASS"Y
4	1	FA20030	HEX NUT 3/8-16
5	1	FA10747	HEX. HEAD BOLT 3/8-16 X 4" LG.
6	1	KE603833	BRACKET
7	1	KE52050	CABLE CLAMP ARENS #MT304-3
8	1	FA11091	#8-32 X 3/8 S.S. Machine Screw
9	1	KE52049	CONNECTOR FITTING, ARENS #FT 319-1
10	1	KE00737	PUMP HANDLE ASSEMBLY
11	1	KE51844	HYDRAULIC PUMP.
12	2	FA11386	HEX BOLT 3/8-16 x 1 1/2 LG.
13	2	FA31010	SPLIT LOCK WASHER 3/8
14	1	FI05059	ELBOW 90°, AEROQUIP #2062-8-6
15	2	FI05079	NUT, AEROQUIP #FC2875-6
16	2	FI05080	FERRULE, AEROQUIP #FF9605-6
17	1	KE52048	HYDRAULIC TUBING
18	1	FI05072	BULKHEAD 90° UNION ELBOW
19	1	KE52222-1	METAL GEAR, 3/4 BORE
20	1	KE52224	PLASTIC GEAR COUPLING
21	1	KE00698	PUMP MTG. PEDESTAL
22	1	KE52222-2	METAL GEAR, 1 1/8 BORE
23	4	FA11509-2	HEX HEAD BOLT, S.S. 1/2-13 X 1 1/4 LG.
24			SEE MOTOR OPTIONS
26	1	FA10606	HEX HEAD BOLT, 15/16-18 X 1 1/4 LG
27	1	KE95265	LABEL, DIRECTION OF MOTOR ROTATION
28	4	FA31033	SPLIT LOCK WASHER , S.S. 1/2
29	2	FA11146	PAN PHIL M/S, S.S. 10-32 X 1/2 LG.
24			MOTOR OPTION.
	1	KE51875-3	MOTOR. VOLTAGE: 208-230/460/3/60
	1	KE51875-4	MOTOR. VOLTAGE: 220-380/440/3/50
	1	KE51875-5	MOTOR. VOLTAGE: 575/3/60
25	1	KE52171	GASKET, OIL TANK

KE00865G

HYDRAULIC FLOW CONTROL HARNESS

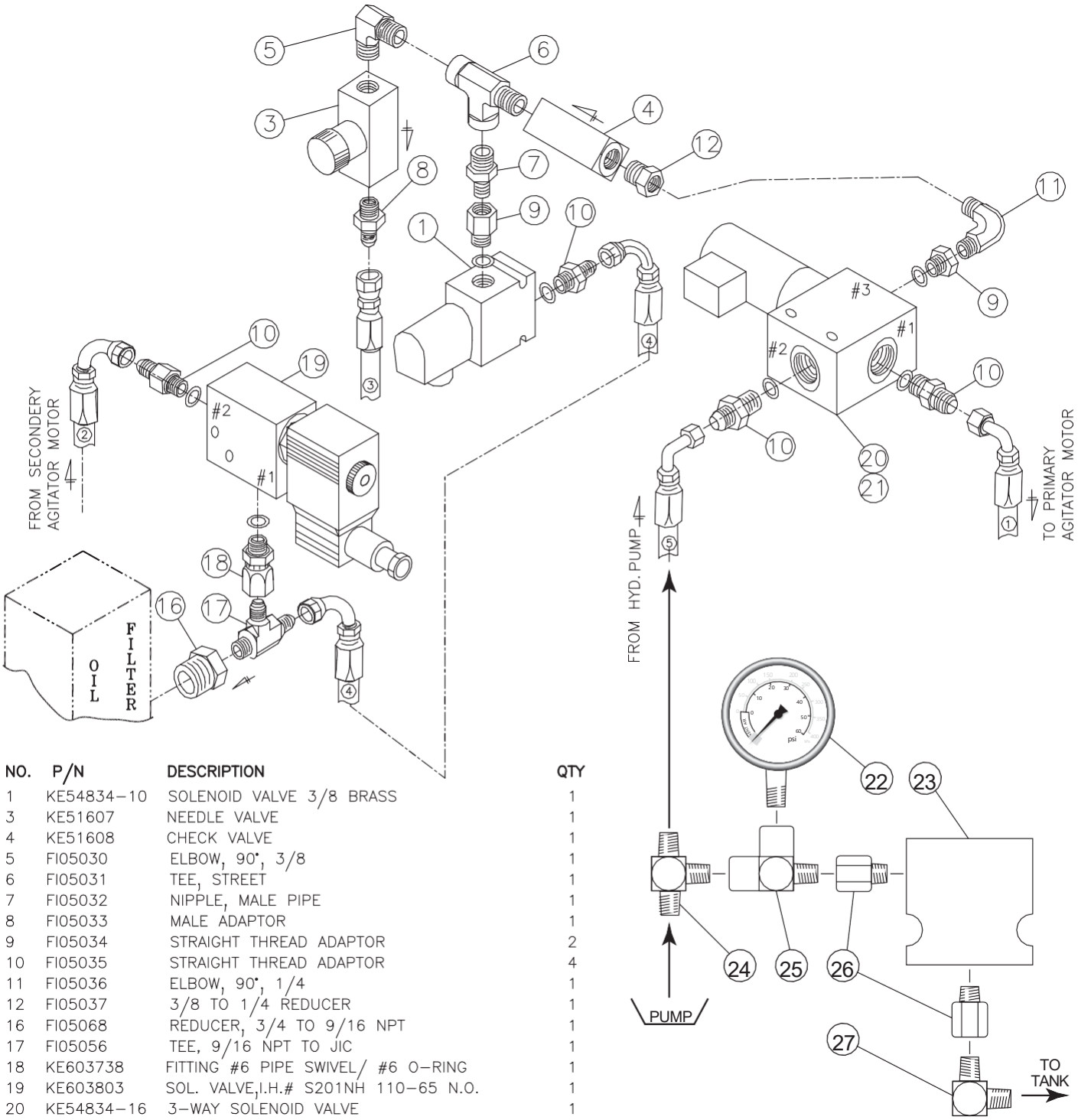

NO.	P/N	DESCRIPTION	QTY
1	KE54834-10	SOLENOID VALVE 3/8 BRASS	1
3	KE51607	NEEDLE VALVE	1
4	KE51608	CHECK VALVE	1
5	FI05030	ELBOW, 90°, 3/8	1
6	FI05031	TEE, STREET	1
7	FI05032	NIPPLE, MALE PIPE	1
8	FI05033	MALE ADAPTOR	1
9	FI05034	STRAIGHT THREAD ADAPTOR	2
10	FI05035	STRAIGHT THREAD ADAPTOR	4
11	FI05036	ELBOW, 90°, 1/4	1
12	FI05037	3/8 TO 1/4 REDUCER	1
16	FI05068	REDUCER, 3/4 TO 9/16 NPT	1
17	FI05056	TEE, 9/16 NPT TO JIC	1
18	KE603738	FITTING #6 PIPE SWIVEL/ #6 O-RING	1
19	KE603803	SOL. VALVE,I.H.# S201NH 110-65 N.O.	1
20	KE54834-16	3-WAY SOLENOID VALVE	1
21	KE603873	SOLENOID VALVE CONNECTOR (HIRSCHMAN)	1
	KE01700	PRESS RELIEF VALVE ASSEMBLY	1 (per kettle)
22.	KE52382	PRESSURE GAUGE; LIQUID FILL	1
23.	KE51874	PRESSURE RELIEF VALVE	1
24.	FI05054	MALE BRANCH TEE FITTING	1
25.	FI05069	STREET TEE	1
26.	FI05034	STRAIGHT THREAD ADAPTER	2
27.	FI05030-1	ELBOW; 3/8-1 1/4 - 90 DEG.	1

KE00713J & KE01700B

ELECTRICAL COMPONENT ASSEMBLY

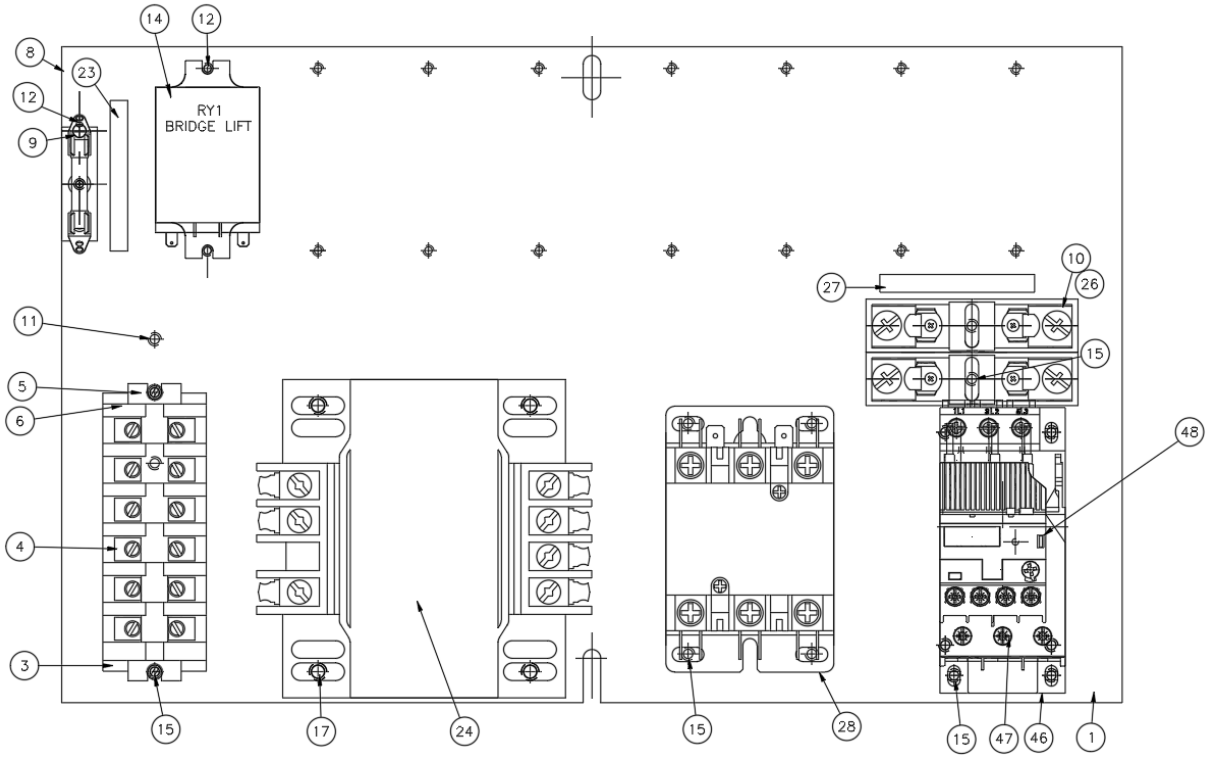

NOTE: ITEMS #40 TO #43 AND #45 ARE NOT SHOWN

HEAT/COOL WITH CONTROL

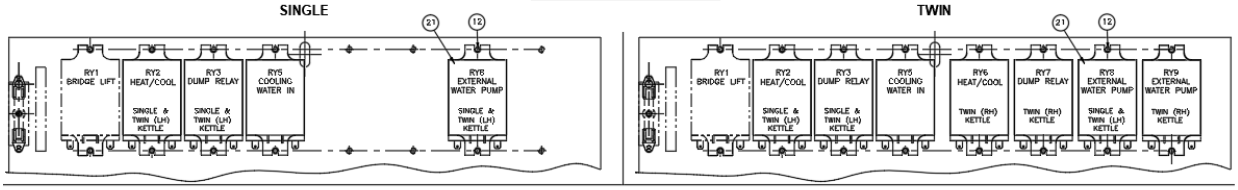

HEAT WITH SSV/DTCI/TCR

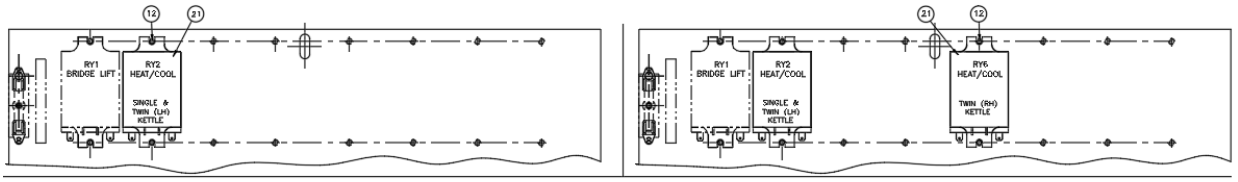

HEAT/COOL WITHOUT CONTROL

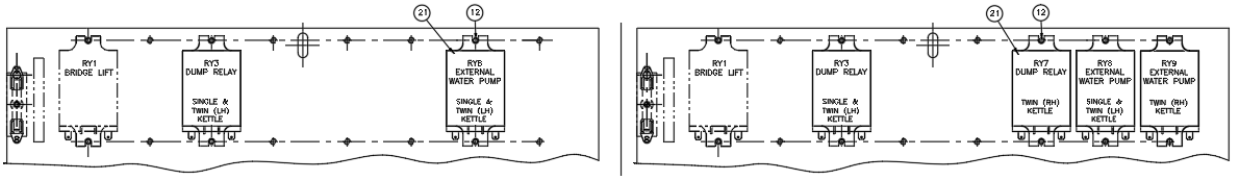

KE00888R			
ITEM	PART NUMBER	DESCRIPTION	QTY
1	KE50343-7	COMPONENT MOUNTING PLATE	1
3	KE54761-3	TERMINAL BLOCK MOUNTING RAIL	1
4	SK50055-1	TERMINAL BLOCKS	6
5	SK50054-1	TERMINAL BLOCK END BARRIER	1
6	SK50054-2	TERMINAL BLOCK END ANCHOR	1
8	KE51139	FUSE HOLDER	1
10	KE51139-1	FUSE HOLDER	2
11	FA12500	SCREW #8-32 x 3/8 lg. BRASS WITH UNDERCUT FOR GROUND	1
12	FA15018-7	SCREW #6-32 x 1/4 lg.	3
14	KE50753-10	RELAY (RY1)	1
15	FA15018-3	SCREWS #8-32 x 1/4 lg.	12
28	KE603902-1	CONTACTOR	1
40	KE003209-1	SWITCH; ON/OFF	1
41	KE003209-5	SWITCH; MIX/OFF/LIFT MNTD	1
42	KE003209-11	SWITCH; PTILT, BRIDGE LIFT	1
43	KE003844	FUSE PLATE ASS'Y.; FLOOR MIXERS	1
45	KE003848	COMPONENT PLATE ASS'Y. FOR SENSOR	1
46	KE604425-1	OVERLOAD RELAY, MOUNTING STAND (DB-42)	1
51	WHKE00888R	WIRE HARNESS	1

HEAT/COOL WITH CONTROL			
MKDL-T			
21	KE50753-10	RELAY	4
12	FA15018-7	SCREW #6-32 x 1/4 LG.	8
TMKDL-T			
21	KE50753-10	RELAY	7
12	FA15018-7	SCREW #6-32 x 1/4 LG.	14
HEAT WITH SSV/DTCI/TCR			
MKDL-T			
21	KE50753-10	RELAY	1
12	FA15018-7	SCREW #6-32 x 1/4 LG.	2
TMKDL-T			
21	KE50753-10	RELAY	2
12	FA15018-7	SCREW #6-32 x 1/4 LG.	4
HEAT/COOL WITHOUT CONTROL			
MKDL-T			
21	KE50753-10	RELAY	2
12	FA15018-7	SCREW #6-32 x 1/4 LG.	4
TMKDL-T			
21	KE50753-10	RELAY	4
12	FA15018-7	SCREW #6-32 x 1/4 LG.	8

KE00888-1 MKDL & MKEL COMMON PARTS			
ITEM	PART NUMBER	DESCRIPTION	QTY
9	KE52936-6	FUSE- 3 AMP	1
23	KE95242-2	LABEL	1
30	KE00888R	COMPONENT PLATE ASSEMBLY	1
48	KE604426	CABLE TIE, 3" LONG	
VOLTAGE OPTIONS			
		200-240 V A.C.	1
24	KE53838-5	TRANSFORMER (250VA)	1
17	FA15018-4	SCREWS #8-32 x 3/8 lg.	4
26	KE52936-16	FUSE, 1.5AMP, SLOW BLOW, TIME DELAY	2
27	KE95242-3	LABEL	1
47	KE604425-2	OVERLOAD RELAY, 7.6A – 10A (TF42-10)	1
		380-415 V A.C.	
24	KE53838-6	TRANSFORMER	1
17	FA15018-4	SCREWS #8-32 x 3/8 lg.	4
26	KE52936-17	FUSE, 3/4AMP, SLOW BLOW, TIME DELAY	2
27	KE95242-4	LABEL	1
47	KE604425-3	OVERLOAD RELAY, 4.2A – 5.7A (TF42-5.7)	1
		440-480 V A.C.; 575-600 V A.C.	
24	KE53838-5	TRANSFORMER	1
17	FA15018-4	SCREWS #8-32 x 3/8 lg.	4
26	KE52936-17	FUSE, 3/4AMP, SLOW BLOW, TIME DELAY	2
27	KE95242-4	LABEL	1
47	KE604425-3	OVERLOAD RELAY, 4.2A – 5.7A (TF42-5.7)	1

REMOTE CONTROL ASSEMBLY

For units with Water Meter and/or DTCI option

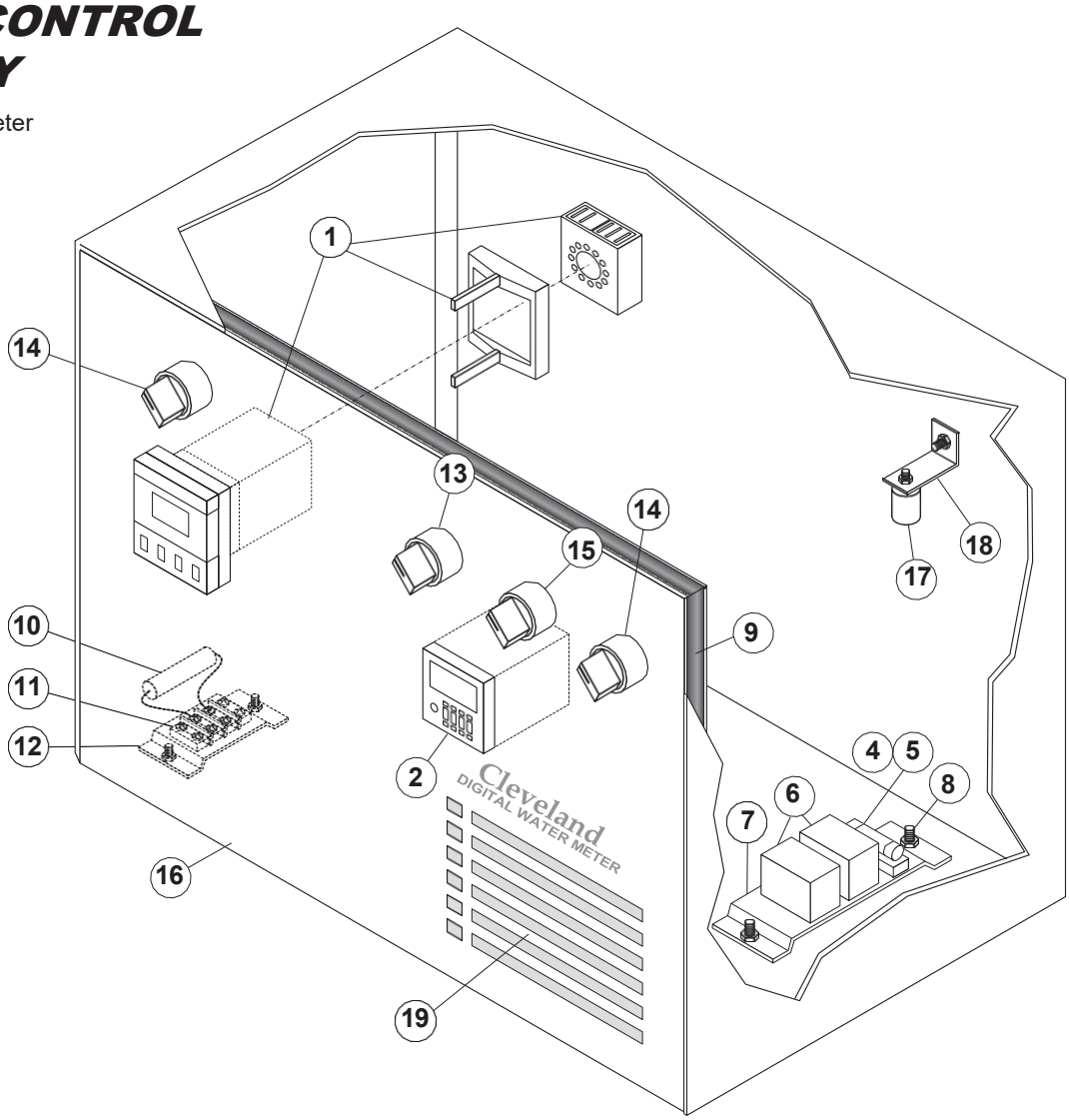

ITEM NO.	PART NO.	DESCRIPTION	QTY.
1.	KE53479-3	Digital Temperature Controller and Indicator	1
2.	KE53257-1	Digital Counter	1
4.	KE52936-3	Fuse	1
5.	KE51139	Holder, Fuse	1
6.	KE50753-10	Relay	1 (per option)
7.	KE50343-6	Mounting Plate	1
8.	FA10131	Nut	3
9.	KE52280	Weather Strip, 76” long	1
10.	KE01820	Ambient Heater Assembly	1
11.	SK50370-1	Terminal Block, 2 Section	1
	SK50370-2	Terminal Block, 45°	2
	SK50370-3	Terminal Block, 90°	2
12.	KE54402	Mounting Bracket, Terminal Block	1
13.	KE003209-6	Momentary Spring Return Switch Assembly	1
14.	KE003209-1	Switch Assembly, On/Off - Maintained	2
15.	KE003209-7	Momentary Spring Return Switch Assembly	1
16.	KE52272	Console Door	1
17.	KE52710	Thermostat	1
18.	KE603924	Bracket for Thermostat	1
19.	KE95229-2	Label	1

MAIN CONSOLE CONTROLS

For standard Mixer Kettles

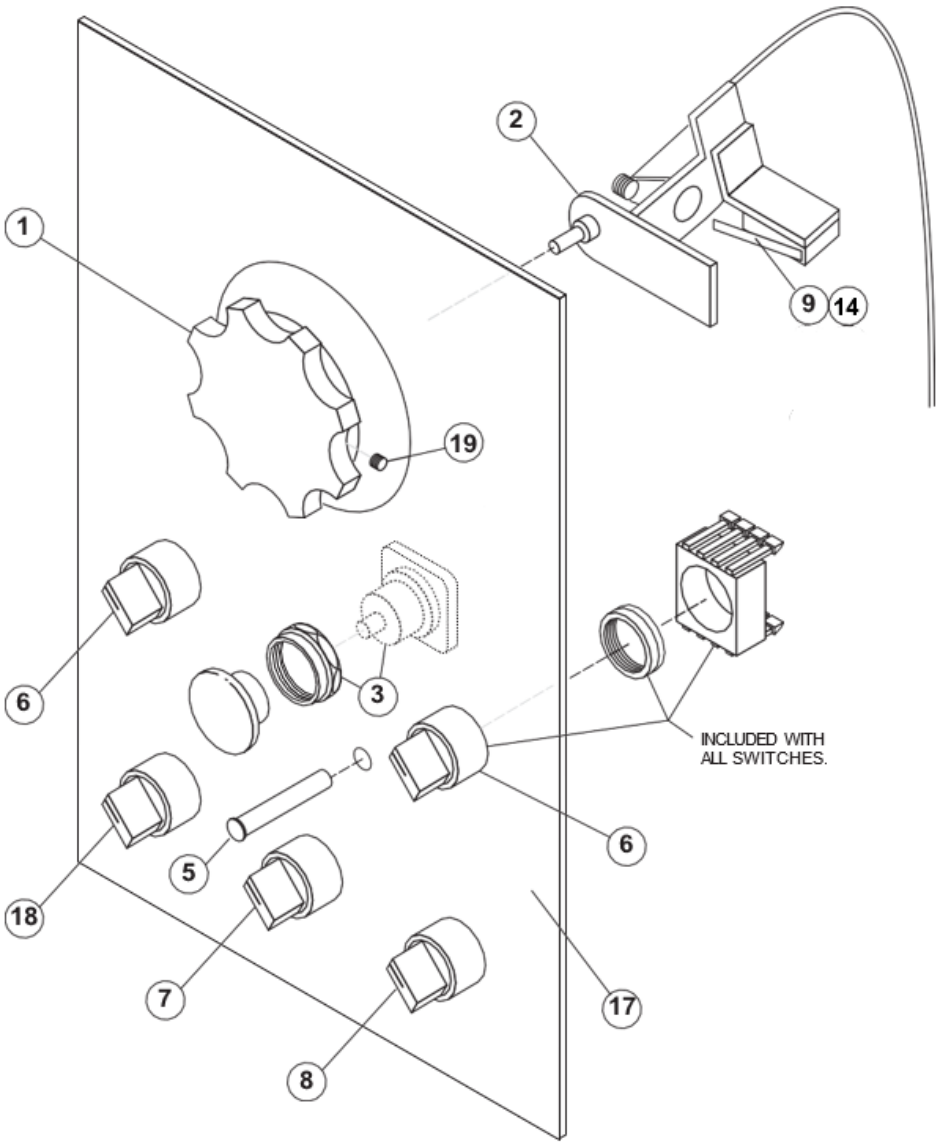

ITEM NO.	PART NO.	DESCRIPTION	QTY.
1.	KE52190	Knob, Speed Control	1
2.	KE00860	Cable and Bracket, Speed Control (includes Micro Switch, item 9)	1
3.	KE53193	Emergency Switch	1
5.	SK50315-1	Pilot Light	1
6.	KE003209-3	Switch Assembly, On/Off/On - Maintained	
6.	KE003209-4	Switch Assembly, On/Off - Maintained	
		(single kettle)	1
		(twin kettle)	2
7.	KE003209-5	Switch Assembly, On/Off/ON - Maintained	1
8.	KE003209-11	Switch Assembly, On/Off/On - Momentary	1
9.	KE52180	Micro Switch	1
14.	KE52050	Cable Clamp	2
17.	KE95230-2	Label:	1
18.	KE003209-1	Switch Assembly, On/Off	1
19.	KE52364	Plunger, Set Screw	1

WATER METER ASSEMBLY - 18" CONSOLE

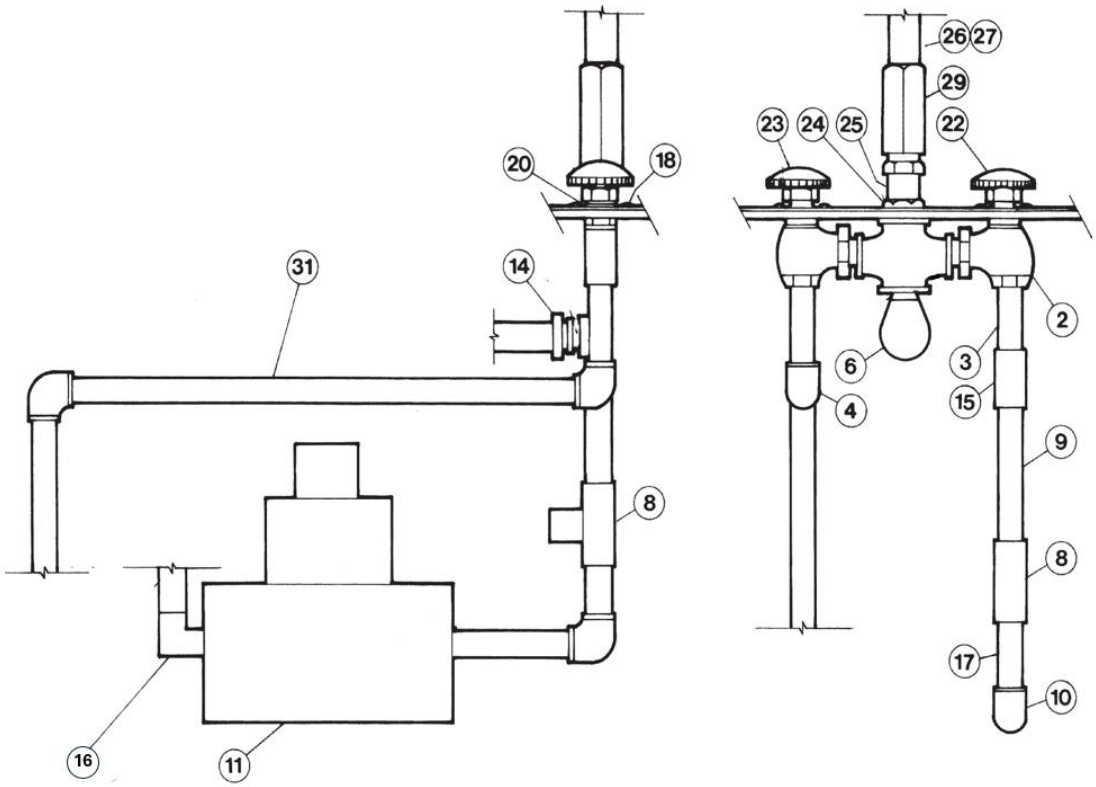

ITEM NO.	PART NO.	DESCRIPTION	QTY.
2.	KE02055-2	Steam Valve Modification	2
3.	N0640B4-5	Nipple	2
4.	FI00063	Elbow 90 degree	4
6.	KE600812-1	Street Elbow	1
8.	KE54834-5	** Solenoid Valve, 3/4"*	1
9.	N0640B3	Nipple, Gallon Meter	1
10.	FI00363-3	Reducing Elbow 90 Degree	1
11.	KE51861	Gallon Meter	1
	KE51860-1	Litre Meter	
14.	FI05220-3	Hose Clamp	2
15.	FI00179	Tee	1
16.	FI05074	Nipple	2
	KE600362	Nipple for Water Cooling Only	
17.	N0640B1-5	Nipple	1
18.	FA11091	Machine Screw	8
20.	KE51369	Steam Valve Flange	2
22.	KE603823	Label "Hot"	1
23.	KE603824	Label "Cold"	1
24.	SD50097	Flanged Nut	1
25.	KE51585	Faucet Spout Fitting	1
26.	KE50825-7	Faucet Spout	1
27.	FA05002-19	"O" Ring	1
29.	KE51736	Long Faucet Nut	1

***NOTE:** See SOLENOID VALVE MAINTENANCE section for further information.

MANUAL & POWER TILT, ELECTRIC AND DIRECT STEAM – 10” CONSOLE

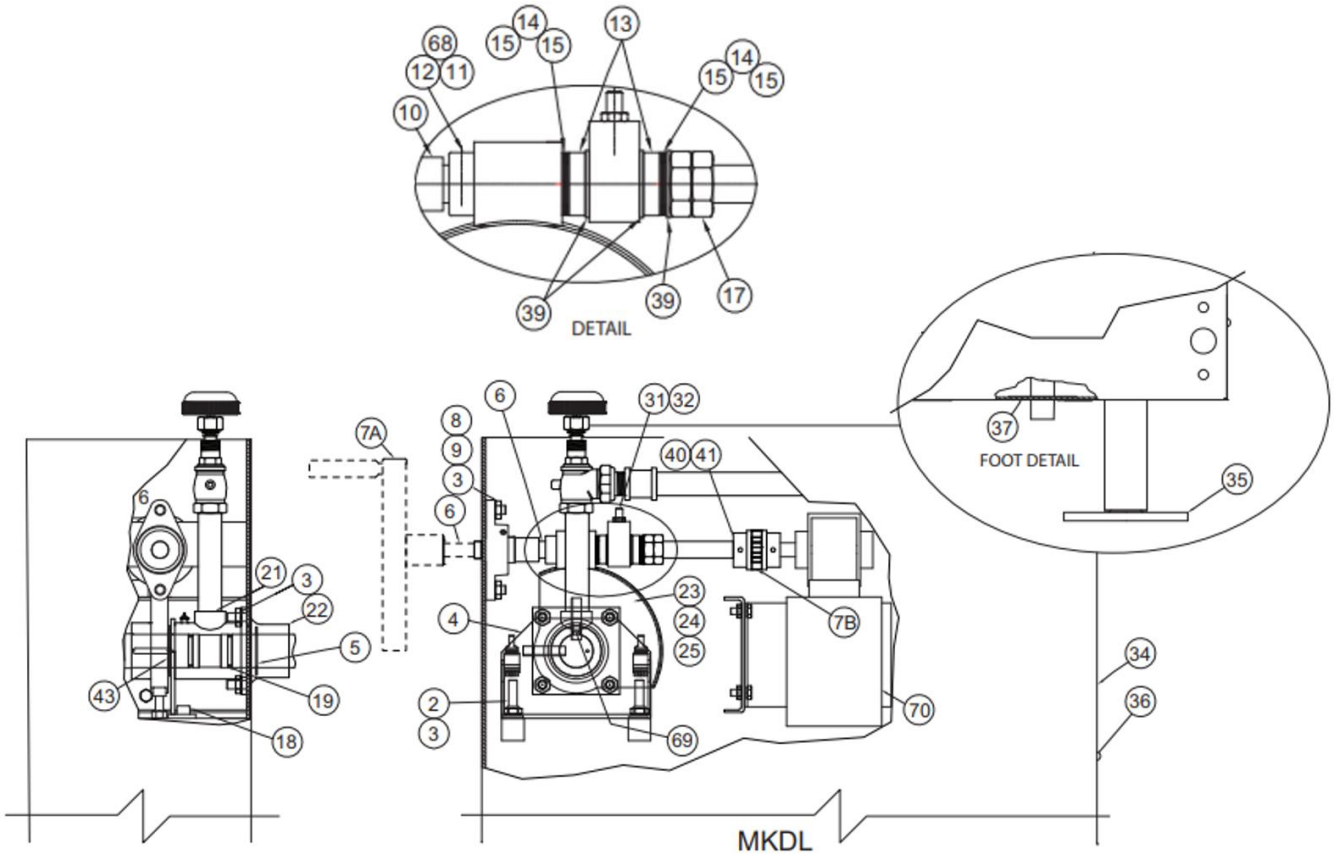

ITEM	PART #	DESCRIPTI ON	QTY
		COMMON PARTS	
2	FA10772	HEX SOCKET CAP SCREW 3/8-16 X 1 1/2"	2
3	FA20030	HEX NUT; # 3/8-16 ZINC PLAT	8
8	KE51730	BEARING; TILT SHAFT	1
9	FA31010	SPLIT LOCKWASHER; 3/8" BOLT	6
12	FA95005	TENSION PIN;3/16"D.X1-1/4 LONG	1
13	KE52193-1	SPACER; THRUST BEARING(MKDL)	2
14	KE52191	BEARING; NTA1220 INA #TC1220	2
15	KE52192	WASHER; BEARING INA #TWA1220	4
17	FA95008	JAM NUT; 3/4-16 MS.	2
18	FA10768	HEX SOCKET CAP SCREW 3/8-16 X 3/4"	2
25	FA19201	SET SCREW; 3/8-24 X 1/2"	1
31	FA19177	SET SCREW; 5/16-24 X 1"	1
32	FA20047	JAM NUT; 5/16-24 PLATED	1
34	FA11145	SCREW;10-32 X 3/8" 18-8SS	8
39	FA30088	WASHER; 3/4 SAE	3
70	FA30088	MOTOR	1

* - ITEMS USED IN MKDL/TMKDL ONLY.

ITEM	PART #	DESCRIPTION	QTY
4	KE00691	TRUNNION HOUSING SUPPORT (40-80 GAL)	1
	KE01209	TRUNNION HOUSING SUPPORT (100-150 GAL)	1
5	FA95007-1	RET.RING;SP-NR #R3100-150, 40-80 GAL	2
	FA95007-4	RET.RING;SP-NR #R3100-200, 100-150 GAL	2
6	KE50375	MAN.TILT SHAFT; SMALL GEAR	1
	KE503751	MAN.TILT SHAFT; BIG GEAR	1
	KE50441-1	POWER TILT SHAFT; MKDL/TMKDL-40/60/80-T; MKEL/TMKEL-40/60-T	1
	KE52836-1	POWER TILT SHAFT; MKDL/TMKDL-150-T	1
	KE52836-3	POWER TILT SHAFT; MKDL/TMKDL-100/125-T; MKEL/TMKEL-80/100-T	1

ITEM	PART #	DESCRIPTION	QTY
7	KE00508	HANDWHEEL ASS'Y.; KETTLES	1
7B	TKIT099	POWER TILT KIT; MKDL/TMKDL-40/60/80-T; MKEL/TMKEL-40/60-T	1
	TKIT099-1	POWER TILT KIT; MKDL/TMKDL-100/125/150-T; MKEL/TMKEL-80/100-T	1
10	KE50426-6	SPACER; SHAFT TILT KETTLES 25-80 GAL	1
	KE50426-7	SPACER; SHAFT TILT KETTLES 100-150 GAL	1
11	KE50315	WORM GEAR; KETTLES, 40-125 GAL	1
	KE503151	WORM GEAR; MKDL150 & UP	1
19	FA05002-6	O'RING;VITON (A-218), 40-80 GAL	2
	FA05002-27	O'RING;VITON (A-224), 100-150 GAL	2
21	KE00699-1	TRUNNION HSG.WLD'T/MACH	1
	KE01182-1	TRUNNION HSNG.ASS'Y; 2"	1
22	KE51629-1	TRUNNION SLEEVE; 2"PIPE	1
	KE51629-3	TRUNNION SLEEVE; 3"TUBE	1
23	KE00151	SEGMENT GEAR; SMALL(1.5")	1
	KE52833	SEGMENT GEAR; LARGE(2")	1
24	FA95055-4	KEY; SQUARE, 1/4 X 1 1/2	1
	FA95055-11	KEY; SQUARE 3/8 X 2	1
35	KE00099	FOOT ASS'Y.	2/3
36	KE51628-1	CONSOLE REAR COVER; 10" CONSOLE	1
	KE51628-2	REAR COVER; 12" CONSOLE	1
37	KE51998	WASHER; STEAM-IN	2
38	KE519981	WASHER; STEAM-IN (100 UP)	2
43	KE527041	WASHER;BRASS (2 1/64 ID)	2
68	KE53293	WORM COLLAR;150 GAL & UP	1
69	FA95003	KEY; WOODRUFF #606	1

KE003791A

COMPONENT PLATE ASSEMBLY - POWER TILT KETTLES

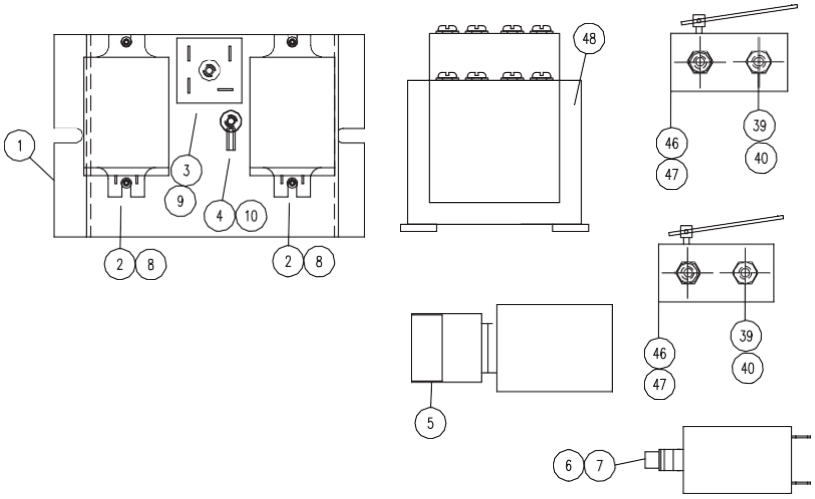

VOLTS OPTION	PART NUMBER	COMMON PARTS COMPONENT PLATE ASS'Y		TRANSFORMER ITEM # 48	
		PART #	QTY.	PART #	QTY.
208V	KE02185-11	KE02185-5	1	KE53838-10	1
220V-480V	KE02185-12	KE02185-5	1	KE53838-12	1
380V	KE02185-13	KE02185-5	1	KE53838-11	1

COMMON PARTS KE02185-5			
1	KE50343-16	COMPONENT PLATE	1
2	KE50753-10	RELAY, 10 A/120V	2
3	KE50581	BRIDGE RECTIFIER	1
4	KE50473	GROUND LUG	1
5	KE003209-11	SWITCH, POWER TILT	1
6	KE50579-1	CIRCUIT BREAKER, 1.5A	1
7	KE50580	WATER RESISTANT BOOT	1
8	FA11051	6-32 X 3/16 PAN PHIL S.S.	4
9	FA11091	8-32 X 3/8 PAN PHIL S.S.	1
10	FA11089	8-32 X 1/4 PAN PHIL S.S.	1
39	FA20002	HEX NUT 6-32	2
40	FA11060	SCREW 6-32 X 1	2
46	KE51007	MICRO SWITCH, HONEYWELL	2
47	KE50498	MICRO SWITCH INSULATION	2
48	REF.KE53838	SEE ABOVE	1

PRESSURE RELIEF VALVE, STEAM INLET VALVE & DRAIN COCK

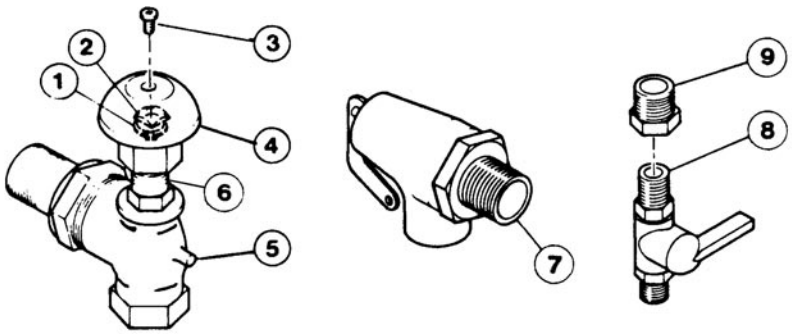

ITEM NO.	PART NO.	DESCRIPTION	QTY.
1.	KE51892	Retaining ring	1
2.	KE51888	Washer	1
3.	FA11091	Valve knob screw	1
4.	KE50442	Valve knob assembly (includes item 1, 2, 3)	1
5.	KE02055-2	3/4" Chrome steam inlet valve	1
6.	SE50441-2	Steam Inlet Valve Nut	1
7.	KE54941-2	3/4" pressure relief valve, 50 psi, up to 80 gal. / 40F / 60SH	1
	KE54941-11	1 1/4" pressure relief valve, 35 psi, 125-150 gal. / 80F	16.
	KE54941-13	3/4" pressure relief valve, 50 psi, 100 gal. / 60F / 80SH	1
	KE54941-15	3/4" pressure relief valve, 100 psi, up to 80 gal. / 40F / 60SH	1
	KE54941-17	3/4" pressure relief valve, 70 psi, 100-150 gal. / 60F / 80F/ 80SH	1
8.	KE52623	Drain cock	1
9.	FI05271-6	Hex Nipple, 1/2" NPT	1

BUTTERFLY VALVE, 3" (BV3) – KE52286

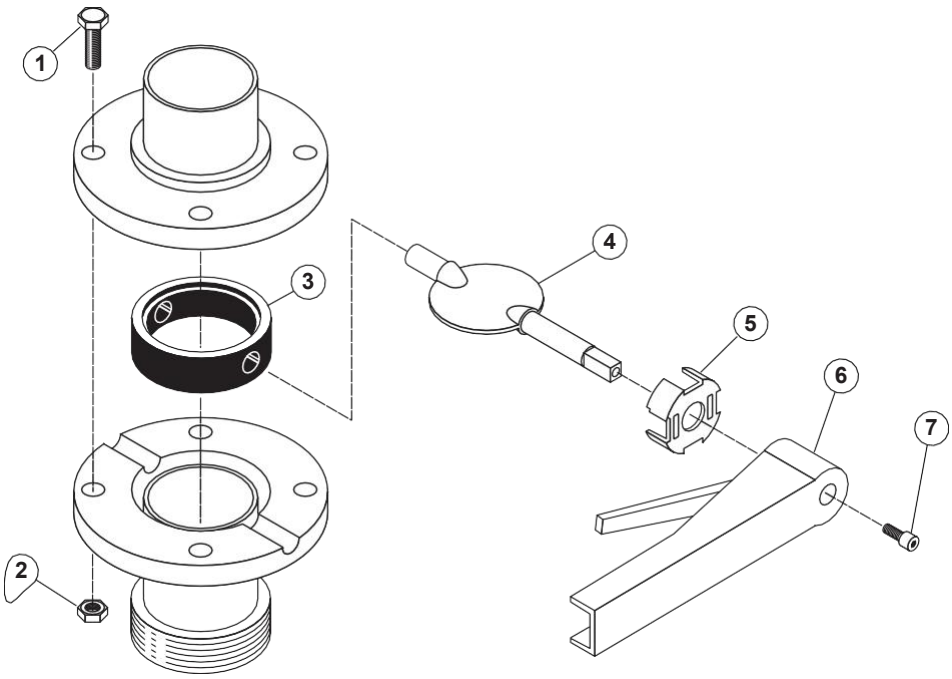

ITEM NO.	PART NO.	DESCRIPTION	QTY.
1. - 7.	KE52286	Butterfly Valve (includes housing)	1
1.	FA11224	Bolt, 5/16-18x1" S.S.	6
2.	FA21024	Nut, 5/16-18	6
3.	SE50433-1	Seat	1
4.	SE50434-1	Stem	1
5.	SE50435-1	Locking Spider	1
6.	SE50436	Handle Assembly	1
7.	SE50437	Allen Bolt	1

AIR VALVE ASSEMBLY (FPVA-3) – KE02281-1

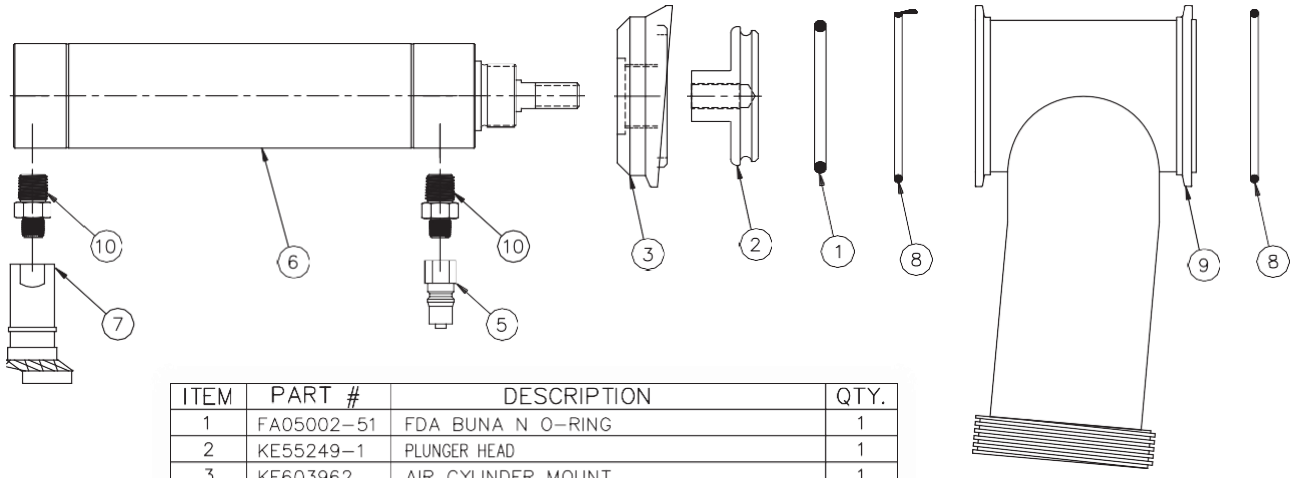

ITEM	PART #	DESCRIPTION	QTY.
1	FA05002-51	FDA BUNA N O-RING	1
2	KE55249-1	PLUNGER HEAD	1
3	KE603962	AIR CYLINDER MOUNT	1
5	KE55257	1/8 NPT BRASS QUICK DISCONNECT COUPLING (MALE HALF)	1
6	KE55253-1	AIR OPERATED CYLINDER	1
7	KE55262	1/8 NPT BRASS QUICK DISCONNECT COUPLING (FEMALE HALF)	1
8	FA05002-53	FDA BUNA N O-RING	2
9	KE003700	DISCHARGE TEE ASSEMBLY	1
10	KE55251-1	HEX NIPPLE(1/4 NPT TO 1/8 NPT)	2

AIR SOLENOID ASSEMBLY (FPVA-3) – KE02292

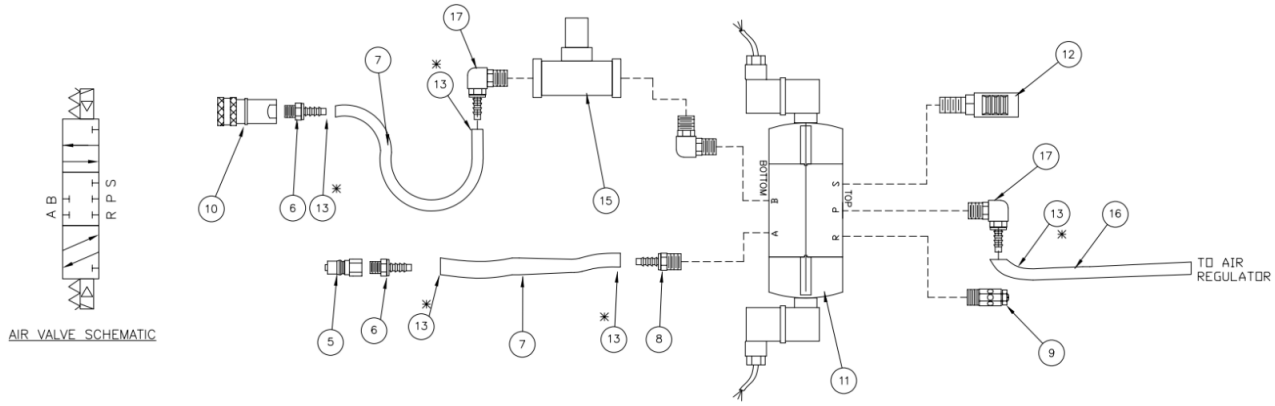

ITEM NO.	PART NO.	DESCRIPTION	QTY.
5.	KE55257	AEROQUIP MALE QUICK PLUG	1
6.	FI05317-1	FAIRVIEW HOSE BARB 1/8” NPT MALE TO 1/4" HOSE	2
7.	KE55259-1	KURI-TEC 1/4" ID x 6 FT. LONG HOSE 250 #W.P.	2
8.	FI05317-2	FAIRVIEW HOSE BARB 1/4" NPT MALE TO 1/4” HOSE	1
9.	KE55261-1	ARROW SPEED EXHAUST MUFFLER 1/8”	1
10.	KE55262	AEROQUIP FEMALE QUICK PLUG	1
11.	KE55263-1	AIRTAC 5 WAY AIR SOLENOID VALVE	1
12.	KE55264-1	ARROW STANDARD 1/8” MUFFLER	1
*13.	FI05220-1	GEAR CLAMP FOR ¼ I.D. HOSE (NOT SHOWN)	5
14.	FI05030-2	90° 1/4 ELBOW, MALE PIPE THREAD, AEROQUIP	1
15.	KE55305	1/4” ARO FLOW CONTROL	1
16.	KE55259-2	KURI-TEC ¼” ID x 3 FT. LONG HOSE 250 #W.P.	1
17.	FI05318	FAIRVIEW 90° ELBOW HOSE BARB/ 1/4 HOSE I.D./14 PIPE, BRASS	2

PLUMBING ASSEMBLY - 10" CONSOLE

(40-80 gal.) –

KE003729

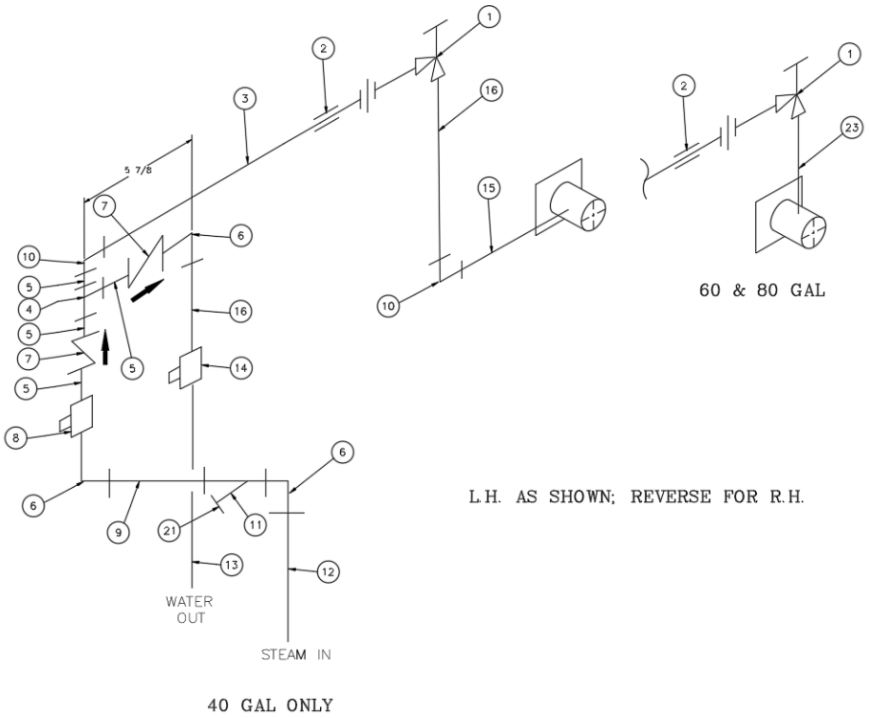

-	KE003729-6	PLUMB 100# (80G) STM-IN/WATER OUT						*
-	KE003729-5	PLUMB 50# (80G) STM-IN/WATER OUT					*	
-	KE003729-4	PLUMB 100# (60G) STM-IN/WATER OUT				*		
-	KE003729-3	PLUMB 50# (60G) STM-IN/WATER OUT			*			
-	KE003729-2	PLUMB 100# (40G) STM-IN/WATER OUT		*				
-	KE003729-1	PLUMB 50# (40G) STM-IN/WATER OUT	*					
ITEM	***PART #***	***DESCRIPTION***	***QTY***					
1	KE02055-2	STEAM VALVE ASS'Y; 3/4" (PLATED NUT)	1	1	1	1	1	1
2	FI00267	COUPLING; 3/4" BRASS	1	1	1	1	1	1
3	N0640B10-875	NIPPLE; 3/4" X 10 7/8" BRASS	1	1	-	-	-	-
	N0640B16-375	NIPPLE; 3/4" X 16 3/8" BRASS	-	-	1	1	1	1
4	FI00179	TEE, 3/4" BRASS (F/F/F)	1	1	1	1	1	1
5	N0640B1-5	NIPPLE; 3/4" X 1 1/2" BRASS	4	4	4	4	4	4
6	FI00152	ELBOW, 90 DEG 3/4" STREET BRASS	3	3	3	3	3	3
7	KE51250-2	CHK. VALVE, 3/4" NPT BRASS	2	2	2	2	2	2
8	KE54834-3	SOLENOID VALVE; 3/4" – 50psi; BRASS	1	-	1	-	1	-
	KE54834-4	SOLENOID VALVE; 3/4" – 100psi, BRASS	-	1	-	1	-	1
9	N0640B3	NIPPLE 3/4" X 3" BRASS	1	1	1	1	1	1
10	FI00063	ELBOW; 90 DEG. 3/4" BRASS (FIP/FIP)	2	2	1	1	1	1
11	KE51654-2	Y-STRAINER; 3/4" BRONZE	1	1	1	1	1	1
12	N0640B15-25	NIPPLE; 3/4 X 15-1/4" BRASS	1	1	1	1	1	1
13	N0640B19	NIPPLE; 3/4" X 19" BRASS	1	1	1	1	1	1
14	KE54834-5	SOLENOID VALVE; 3/4" – 50 psi; BRASS	1	-	1	-	1	-
	KE54834-4	SOLENOID VALVE; 3/4" – 100psi; BRASS	-	1	-	1	-	1
15	N0640B3-5	NIPPLE; 3/4" X 3 1/2" BRASS	1	1	-	-	-	-
16	N0640B3-75	NIPPLE; 3/4 X 3 3/4" BRASS	2	2	1	1	1	1
21	FI00250	PLUG 1/2 SQ HD BRASS	1	1	1	1	1	1
23	N0640B6-125	NIPPLE; 3/4 X 6 1/8" BRASS	-	-	1	1	-	-
	N0640B6-625	NIPPLE; 3/4 X 6 5/8" BRASS	-	-	-	-	1	1

PLUMBING ASSEMBLY - 12" CONSOLE

(100-125 gal.) –

KE003722

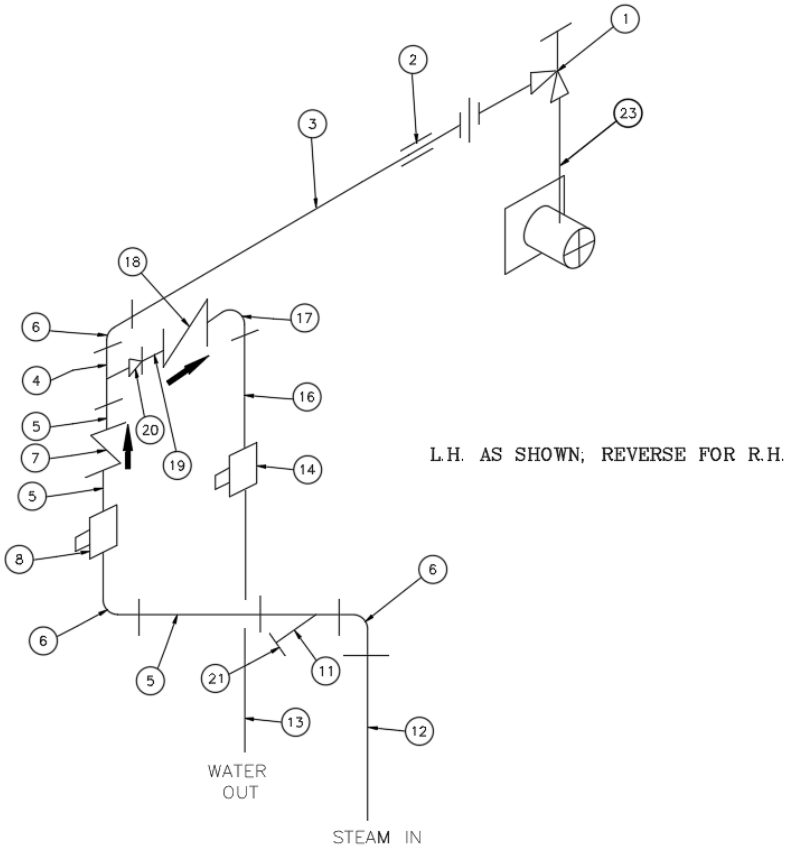

-	KE003722-6	PLUMB 70# (150G) STM-IN/WATER OUT						*
-	KE003722-5	PLUMB 35# (150G) STM-IN/WATER OUT					*	
-	KE003722-4	PLUMB 70# (125G) STM-IN/WATER OUT				*		
-	KE003722-3	PLUMB 35# (125G) STM-IN/WATER OUT			*			
-	KE003722-2	PLUMB 70# (100G) STM-IN/WATER OUT		*				
-	KE003722-1	PLUMB 35# (100G) STM-IN/WATER OUT	*					
ITEM	***PART #***	***DESCRIPTION***	***QTY***					
1	KE02055-4	STEAM VALVE ASS'Y; 1-1/4 (PLATED NUT)	1	1	1	1	1	1
2	FI00465	COUPLING; 1 1/4" BRASS	1	1	1	1	1	1
3	N1240B16	NIPPLE; 1-1/4 NPT X 16"	1	1	1	1	1	1
4	FI00181	TEE; 1 1/4" BRASS (F/F/F)	1	1	1	1	1	1
5	N1240B2	NIPPLE; 1 1/4 X 2" BRASS	3	3	3	3	3	3
6	FI00154	ELBOW; 90 DEG. 1-1/4" STREET	3	3	3	3	3	3
7	KE51367	CHK. VALVE; 1-1/4" NPT BRASS	1	1	1	1	1	1
8	KE54834-8	SOLENOID VALVE; 1-1/4" BRASS	1	1	1	1	1	1
11	KE51654-5	Y-STRAINER; 1-1/4" BRONZE	1	1	1	1	1	1
12	N1240B10-5	NIPPLE; 1-1/4 NPT X 10-1/2"	1	1	1	1	1	1
13	N0640B16-25	NIPPLE; 3/4" X 16 1/4" BRASS	1	1	1	1	1	1
14	KE54834-4	SOLENOID VALVE; 3/4" BRASS	-	1	-	1	-	1
	KE54834-5	SOLENOID VALVE; 3/4" BRASS	1	-	1	-	1	-
16	N0640B5	NIPPLE; 3/4" X 5" BRASS	1	1	1	1	1	1
17	FI00152	ELBOW; 90 DEG. 3/4" STREET	1	1	1	1	1	1
18	KE51250-2	CHK VALVE; 3/4" NPT BRASS	1	1	1	1	1	1
19	N0640B1-5	NIPPLE; 3/4" X 1 1/2" BRASS	1	1	1	1	1	1
20	FI00441	REDUCING BUSHING 1 1/4"-3/4" NPT	1	1	1	1	1	1
21	FI00251	PLUG; 3/4" BRASS	1	1	1	1	1	1
23	N1240B5-75	NIPPLE; 1 1/4 X 5 1/2" BRASS	1	1	-	-	-	-
	N1240B9	NIPPLE: 1 1/4 X 9" BRASS	-	-	-	-	1	1
	N1240B5-187	NIPPLE; 1 1/4 X 5 3/16" BRASS	-	-	1	1	-	-

KE003722

PLUMBING ASSEMBLY - 18" CONSOLE *(40-80 gal.)* ***– KE00723***

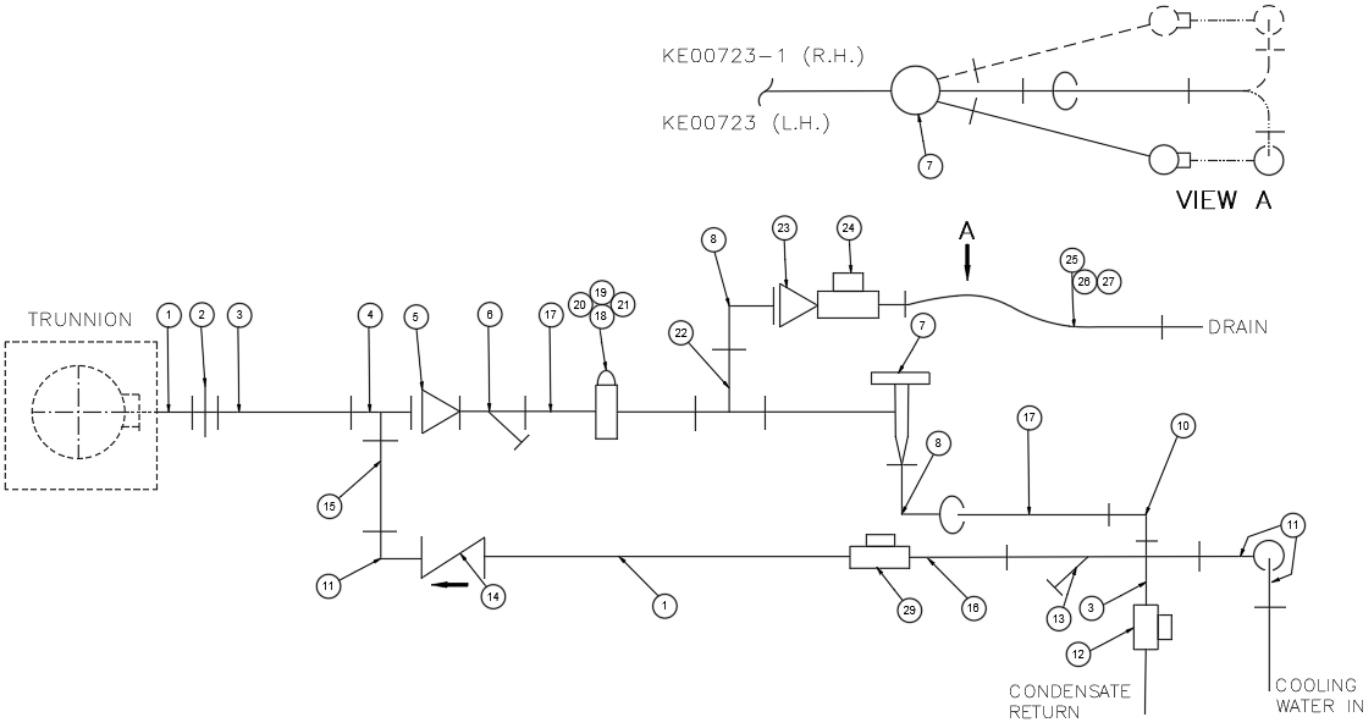

-	KE00723-1	PLUMB 100# (40-80G) COND/WATER IN		*
-	KE00723	PLUMB 50# (40-80G) COND/WATER IN	*	
ITEM	***PART #***	***DESCRIPTION***	***QTY***	
1	N0640B2	NIPPLE 3/4” X 2” BRASS	2	2
2	FI00096	UNION; 3/4" BRASS	1	1
3	N0640B1-5	NIPPLE; 3/4” X 1 1/2" BRASS	1	2
4	FI00179	TEE; 3/4" BRASS (F/F/F)	1	1
5	FI05130	NIPPLE REDUCER; 3/4-1/2	1	1
6	KE51654-4	Y-STRAINER; 1/2" BRONZE	1	1
7	KE51248-1	STEAM TRAP; 1/2” BRONZE1	1	1
8	KE600812-1	ELBOW; STREET 1/2 ANSI BRASS (FIP/MIP)	2	2
10	FI00363-3	ELBOW; REDUCING 3/4-1/2	1	1
11	FI00152	ELBOW; STREET 3/4 – 90D BRASS	3	3
12	KE54834-3	WATER SOLENOID; 3/4", 50# BRASS	1	-
	KE54834-4	STEAM SOLENOID; 3/4", 100# BRASS	-	1
13	KE51654-2	Y-STRAINER; 3/4" BRONZE MESH-SS100	1	1
14	KE51250-2	CHECK VALVE; 3/4" NPT BRASS	1	1
15	N0640B3	NIPPLE; 3/4 X 3” BRASS	1	1
16	N0640B2-5	NIPPLE; 3/4” X 2 1/2” BRASS	1	1
17	N0440B2	NIPPLE; 1/2” X 2” BRASS	2	2
18	KE52666	BLOCK THERMOSTAT MTG	1	1
19	UR50077	THERMOSTAT	1	1
20	FA11052	SCREW SLOT DR 6-32 X 1/4 SS	2	2
21	FA11060	SCREW PHIL DR 6-32 X 1 SS	1	1
22	KE600814-1	TEE; 1/2” BRASS (F/F/F)	1	1
23	FI05089	REDUCER HEX. 1/2-3/8 MPT BRASS	1	1
24	KE54834-2	DUMP SOLENOID VALVE 3/8” BRASS	1	1
25	KE52172	RUBBER HOSE 1/2 ID 25 – 3/4 LONG	1	1
26	FI05149	HOSE FITTING 3/8 NPT	2	2
27	FI05220-3	HOSE CLAMP; 5/16”	2	2
28	FI00250	PLUG 1/2 SQ HD BRASS	1	1
29	KE54834-5	SOLENOID VALVE; 3/4” – 125psi; brass	1	1

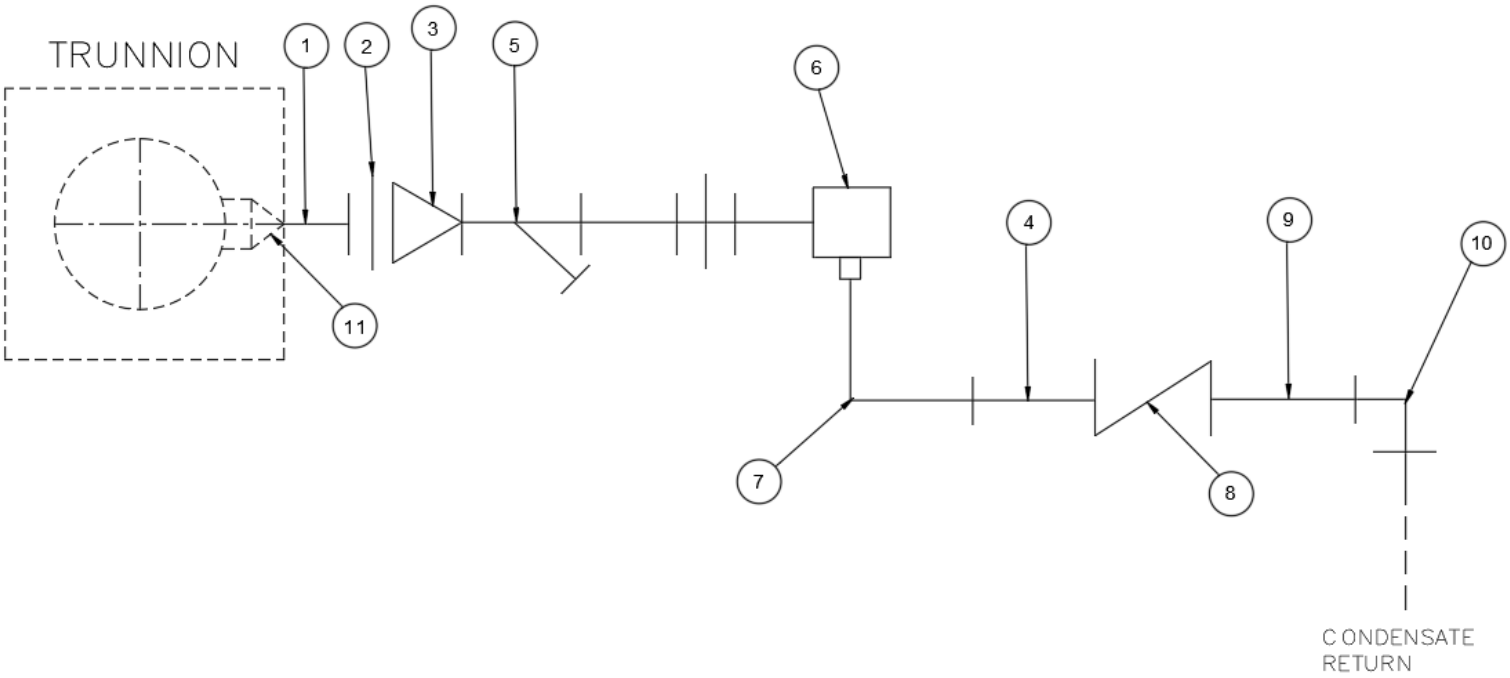

-	KE007233	PLUMBING (100G & UP) COND. RETURN		*
-	KE007232	PLUMBING (40-80G) COND. RETURN	*	
ITEM	***PART #***	***DESCRIPTION***	***QTY***	
1	N0640B2	NIPPLE 3/4” X 2” BRASS	1	1
2	FI00096	UNION, 3/4” BRASS	1	1
3	FI05130	NIPPLE REDUCER, 3/4-1/2	1	1
4	FI05271-3	HEX NIPPLE; 1/2 NPT, 1 1/2 LG	1	1
5	KE51654-4	Y-STRAINER; 1/2” BRONZE	1	1
6	KE51248-1	STEAM TRAP; 1/2” BRONZE	1	1
7	KE600812-1	ELBOW; STREET 1/2 ANSI BRASS (FIP/MIP)	1	1
8	KE51250-1	CHECK VALVE, 1/2” NPT BRASS	1	1
9	N0440B4	NIPPLE; 1/2” X 4” BRASS	1	1
10	FI00062	ELBOW; 1/2-90D-BRASS	1	1
11	FI00441	REDUCING BUSHING 1 1/4-3/4 BRASS	-	1

PLUMBING ASSEMBLY - 18" CONSOLE *(100-125 gal.)* ***– KE00895***

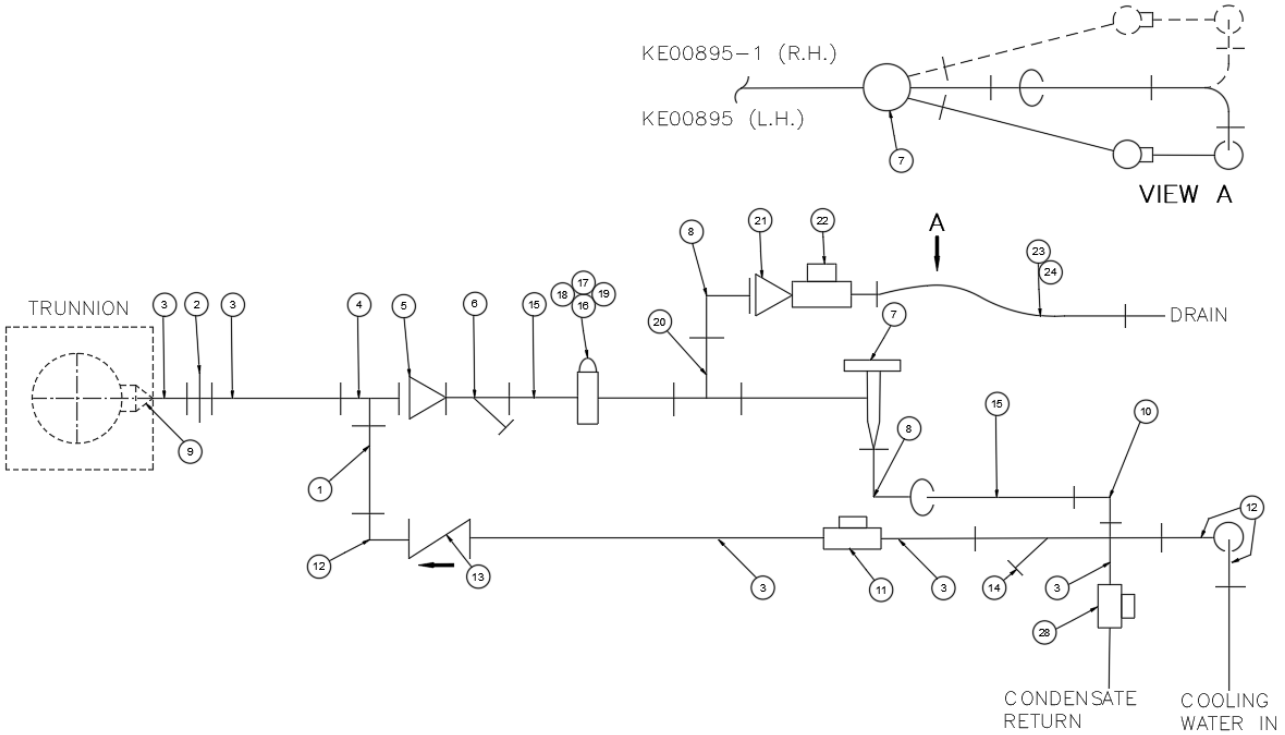

-	KE00895-1	PLUMB 70#(100/125)COND / WATER IN		*
-	KE00895	PLUMB 50#(100) / 35#(125)COND / WATER IN	*	
ITEM	***PART #***	***DESCRIPTION***	***QTY***	
1	N0640B3	NIPPLE 3/4” X 3” BRASS	1	1
2	FI00096	UNION; 3/4” BRASS	1	1
3	N0640B1-5	NIPPLE; 3/4" X 1 1/2” BRASS	5	5
4	FI00179	TEE; 3/4” BRASS (F/F/F)	1	1
5	FI05130	NIPPLE REDUCER; 3/4-1/2	1	1
6	KE51654-4	Y-STRAINER; 1/2” BRONZE	1	1
7	KE51248-1	STEAM TRAP; 1/2” BRONZE	1	1
8	KE600812-1	ELBOW; STREET 1/2 ANSI BRASS (FIP/MIP)	2	2
9	FI00441	REDUCING BUSHING 1 1/4-3/4 BRASS	1	1
10	FI00363-3	ELBOW; REDUCING 3/4-1/2	1	1
11	KE54834-5	WATER SOLENOID; 3/4”, 125#	1	1
12	FI00152	ELBOW; STREET 3/4-90D BRASS	3	3
13	KE51250-2	CHECK VALVE; 3/4” NPT BRASS	1	1
14	KE51654-2	Y-STRAINER; 3/4” BRONZE MESH – SS100	1	1
15	N0440B2	NIPPLE; 1/2” X 2” BRASS	2	2
16	KE52666	BLOCK THERMPSTAT MTG	1	1
17	UR50077	THERMOSTAT	1	1
18	FA11052	SCREW SLOT DR 6-32 X 1/4 SS	1	1
19	FA11060	SCREW PHIL DR 6-32 X 1 SS	2	2
20	KE600814-1	TEE; 1/2” BRASS (F/F/F)	1	1
21	FI05089	REDUCER HEX. 1/2-3/8 MPT BRASS	1	1
22	KE54834-2	DUMP SOLENOID VALVE 3/8” BRASS	1	1
23	KE52172	RUBBER HOSE 1/2 ID 25 – 3/4 LONG	1	1
24	FI05149	HOSE FITTING 3/8 NPT	2	2
25	FI05220-3	HOSE CLAMP; 5/16”	2	2
26	FI00250	PLUG 1/2 SQ HD BRASS	1	1
28	KE54834-3	SOLENOID VALVE; 3/4” – 50psi; BRASS	1	0
	KE54834-4	SOLENOID VALVE; 3/4” – 100psi; BRASS	0	1

PLUMBING ASSEMBLY - 18" CONSOLE *(150 gal.)* – ***KE01418/KE01419***

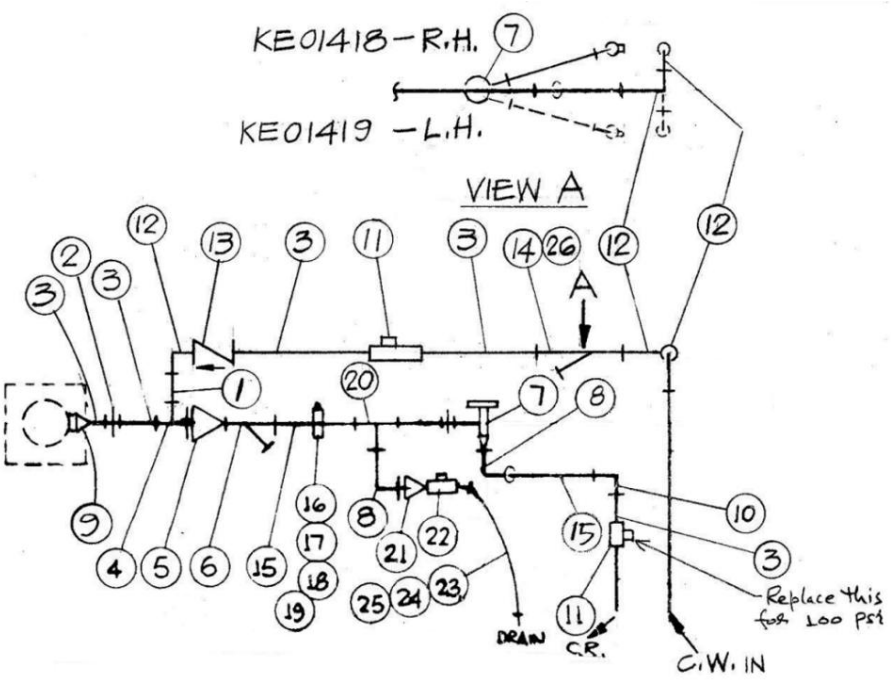

ITEM	PART #	DESCRIPTION	QTY
1	N0640B3	NIPPLE:3/4" X 3" BRASS	1
2	FI00096	UNION;3/4" BRASS	1
3	N0640B1.5	NIPPLE:3/4" X 1 1/2"BRASS	5
4	FI00179	TEE; 3/4" BRASS (FXFXF)	1
5	FI05130	NIPPLE;REDUCING 3/4"-1/2"	1
6	KE51654-4	Y-STRAINER;1/2" BRONZE	1
7	KE51248-1	STEAM TRAP;1/2" BRONZE	1
8	KE600812-1	ELBOW;ANSI B16.15,90,STRE	2
9	FI00441	REDUCING BUSHING;1 1/4"-3	1
10	FI00363-3	ELBOW;REDUCING 3/4"-1/2"	1
11	KE54834-5	SOLENOID VALVE;3/4",BRASS	1
12	FI00152	ELBOW;3/4",90D,STREET BRA	3
13	KE51250-2	CHECK VALVE;3/4"NPT BRASS	1
14	KE51654-2	Y-STRAINER;3/4" BRONZE	1
15	N0440B2	NIPPLE;1/2 X 2 BRASS	2
16	KE52666	BLOCK; THERMOSTAT MTG.	1
17	UR50077	THERMOSTAT	1
18	FA11052	SCREW;SLOT 6-32X1/4"L	1
19	FA11060	SCREW;PHILIPS 6-32X1"L	1
20	KE600814-1	TEE;1/2"BRASS ANSI B16.15	1
21	FI05089	REDUCER;HEX 1/2-3/8"MPT	1
22	KE54834-2	SOLENOID VALVE;3/8"BRASS	1
23	KE52172	RUBBER HOSE;1/2"ID,TWO	1
24	FI05149	HOSE FITTING; 3/8"NPT	2
25	FI05220-3	HOSE CLAMP	2
26	FI00250	PLUG;1/2"SQ.HD. BRASS	1

TRUNNION HOUSING ASSEMBLY – KE00699-1/KE01182-1

TRUNNION HOUSING - 15” CONSOLE

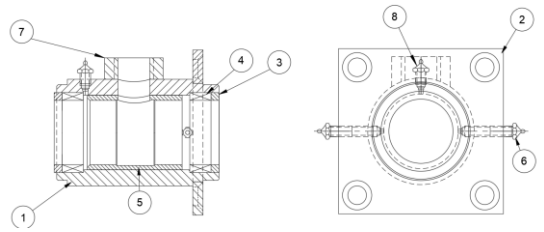

TRUNNION HOUSING - 18” CONSOLE

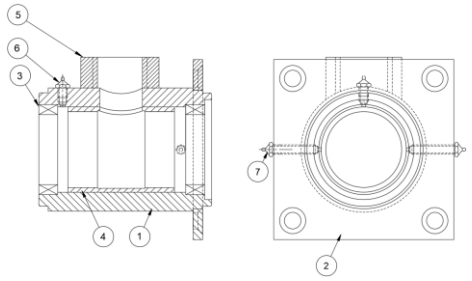

15” CONSOLE

ITEM NO.	PART NO.	DESCRIPTION	QTY.
1.	KE51570	TRUNNION BEARING HOUSING TUBING	1
2.	KE51569-1	TRUNNION HOUSING MTG. PLATE	1
3.	KE52402	BEARING HOUSING WASHER	2
4.	KE51711	ROLLER BEARING (IKO#BA248-Z OH)	2
5.	KE51572	BUSHING FOR BEARING HOUSING	1
6.	KE52348	GREASE FITTING 1/4-28 x 1 1/8” LONG	2
7.	KE52212-1	BUSHING	1
8.	KE51886	GREASE FITTING 1/4-28 STRAIGHT	1

18” CONSOLE

ITEM NO.	PART NO.	DESCRIPTION	QTY.
1.	KE52816	TRUNNION HOUSING TUBE	1
2.	KE52817-1	TRUNNION HOUSING MTG. PLATE	1
3.	KE517111	ROLLER BEARING 1KO 328-Z	2
4.	KE52818	TRUNNION HOUSING BUSHING BRASS	1
5.	KE52212-2	BUSHING 1 1/4 NPT	1
6.	KE51886	GREASE FITTING 1/4-28 STRAIGHT	1
7.	KE52348	GREASE FITTING 1/4-28 STRAIGHT	2

WIRING DIAGRAMS *(consult factory for other wiring configurations)*

TMKDL-T OR TMKDL-CC Heat/Cool with Control

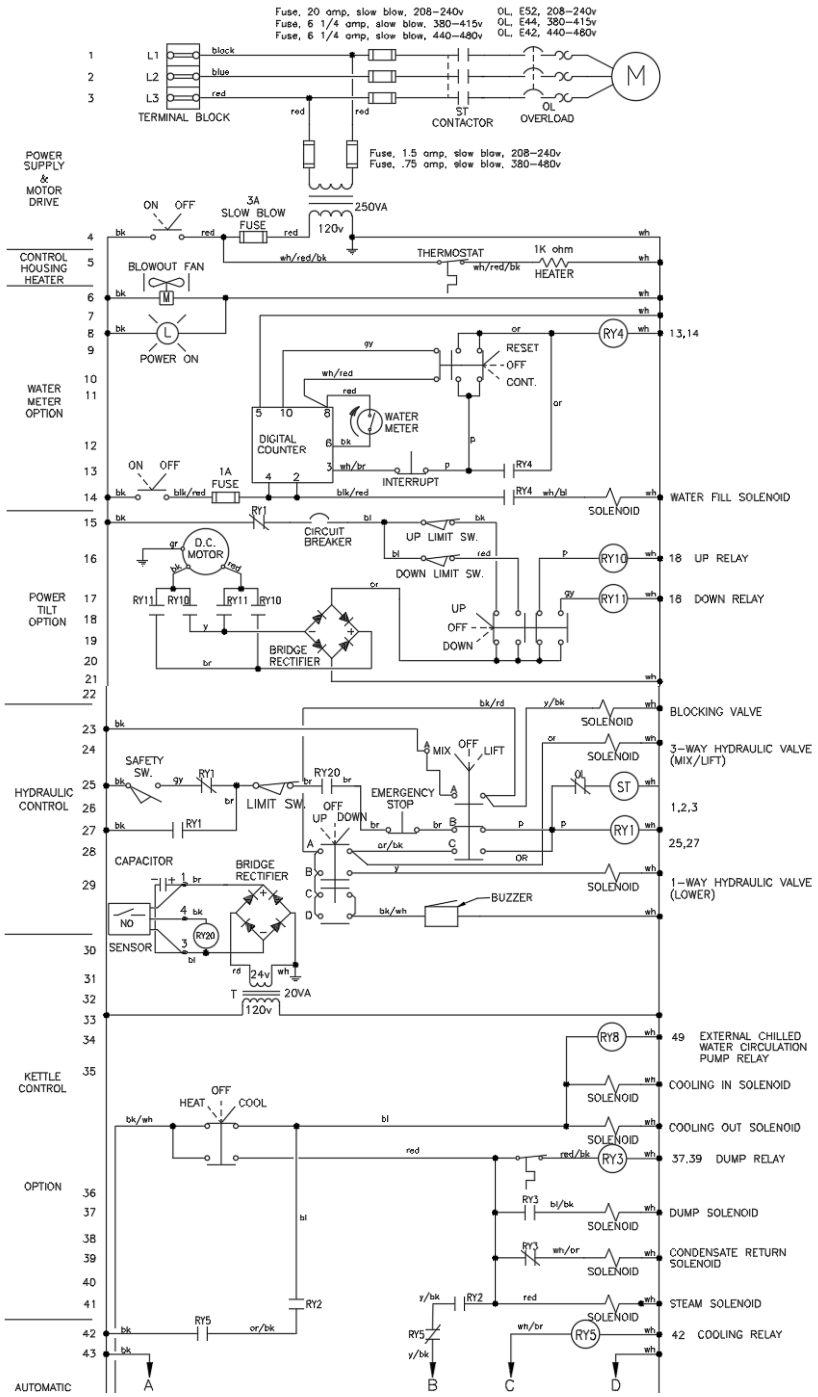

MAINTAINED, MAINTAINED, MOMENTARY

SWITCH	#1	#2	
CLOSED	O	X	
HOLD	O	O	
JOG TO OPEN	X	O	
CONTACT			

X = CLOSED
O = OPEN

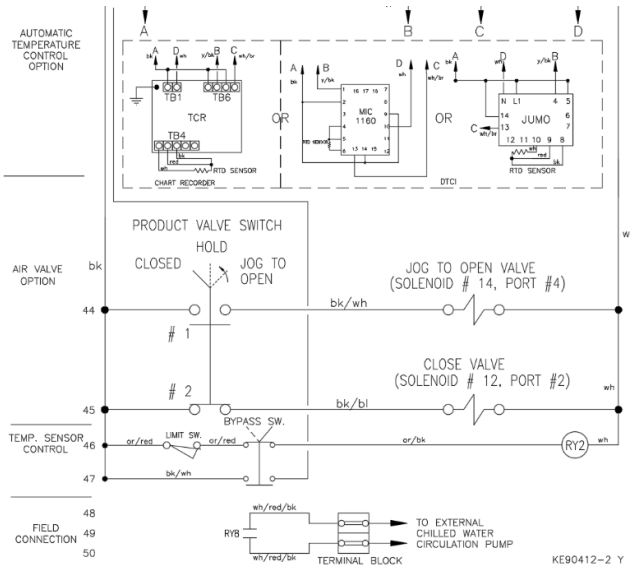

TMKDL-T OR TMKDL-CC HEAT/COOL WITH CONTROL

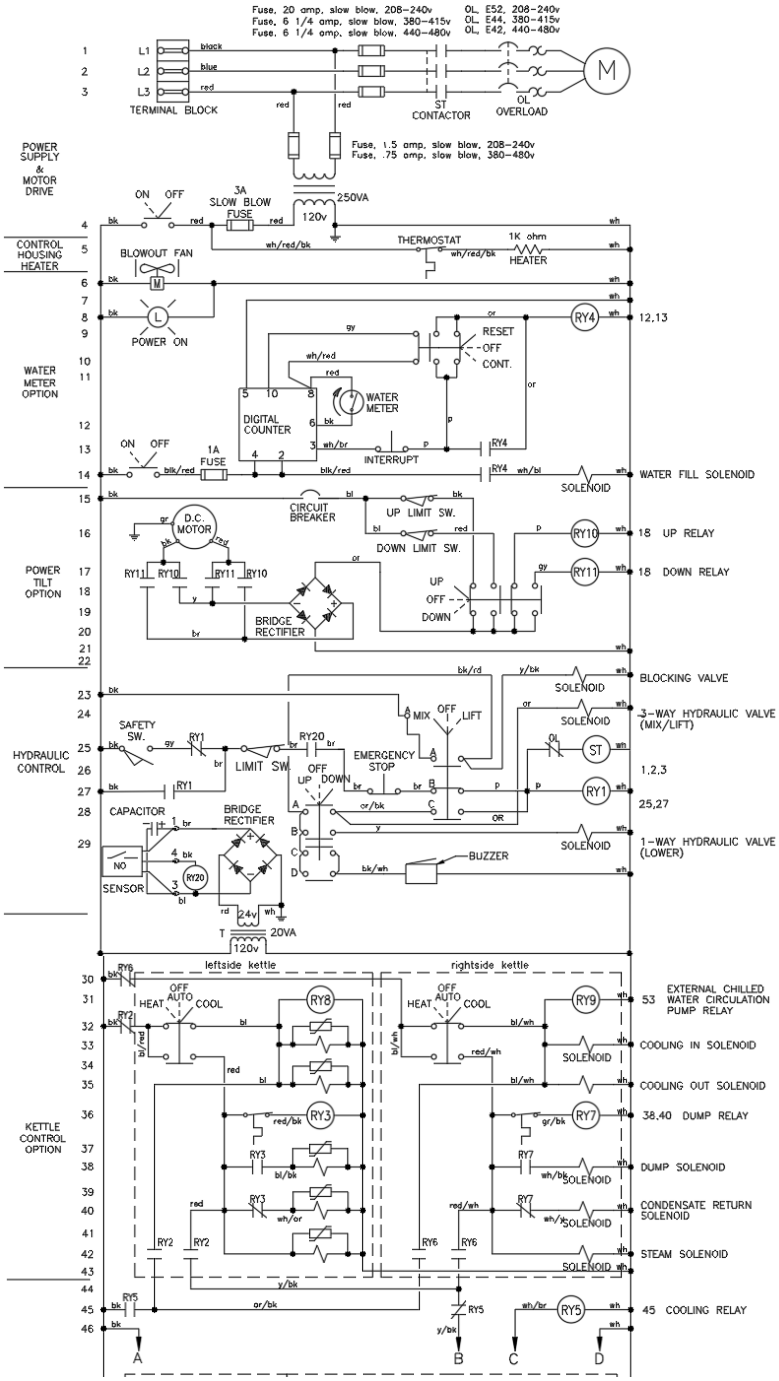

MAINTAINED, MAINTAINED, MOMENTARY

SWITCH	#1	#2	
CLOSED	O	X	
HOLD	O	O	
JOG TO OPEN	X	O	
CONTACT			

X = CLOSED
O = OPEN

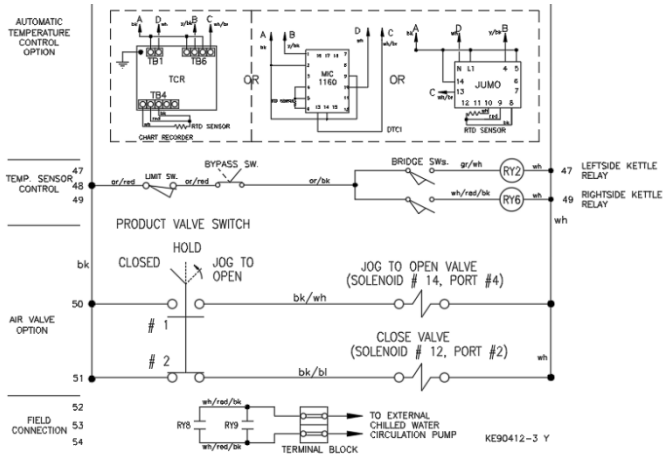

TMKDL-T or TMKDL-CC HEAT/COOL WITH CONTROL

MKDL-T C/W HEAT WITH SSV/DTCI/DATA LOGGER

MAINTAINED, MAINTAINED, MOMENTARY

SWITCH	#1	#2	
CLOSED	O	X	
HOLD	O	O	
JOG TO OPEN	X	O	
CONTACT			

X = CLOSED
O = OPEN

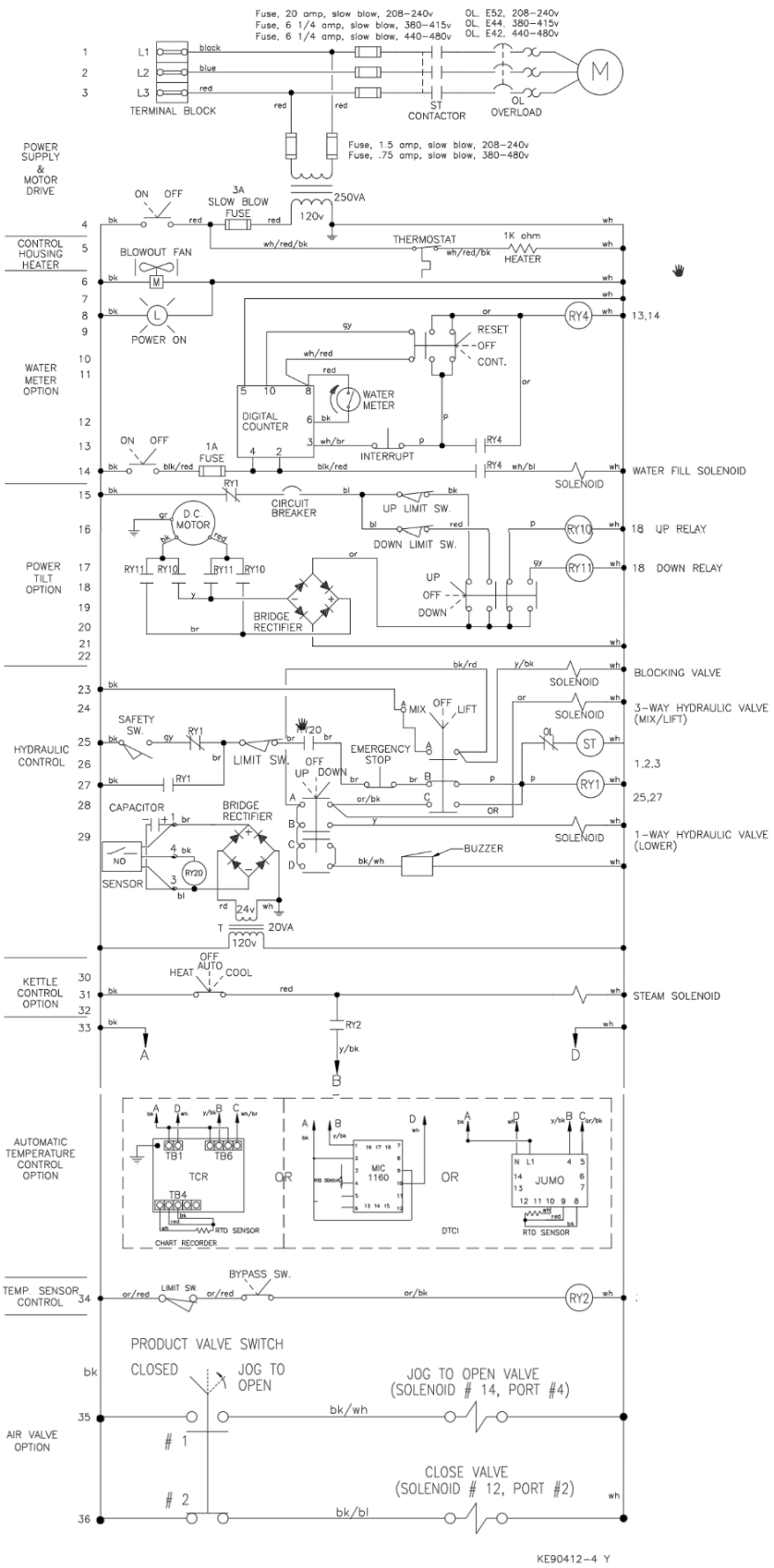

MKDL-T C/W HEAT WITH SSV/DTCI/TCR

TMKDL-T C/W HEAT WITH SSV/DTCI/TCR

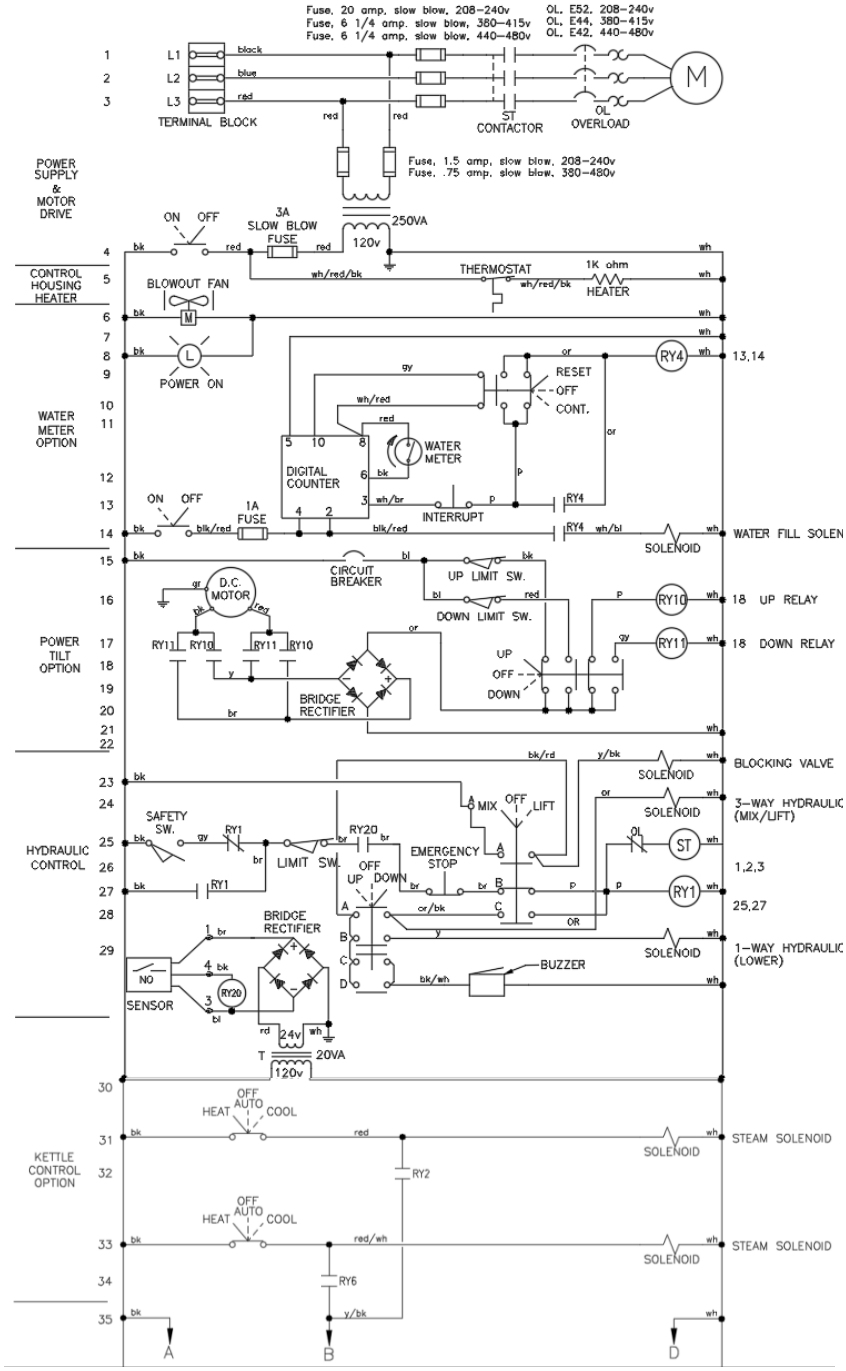

MAINTAINED, MAINTAINED, MOMENTARY

SWITCH	#1	#2	
CLOSED	O	X	
HOLD	O	O	
JOG TO OPEN	X	O	
CONTACT			

X = CLOSED
O = OPEN

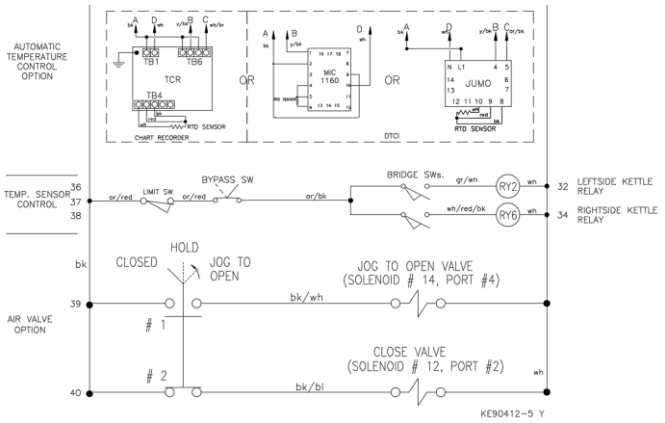

TMKDL-T C/W HEAT WITH SSV/DTCI/TCR

MKDL-T or MKDL-CC HEAT/COOL WITH CONTROL & OIL COOLER

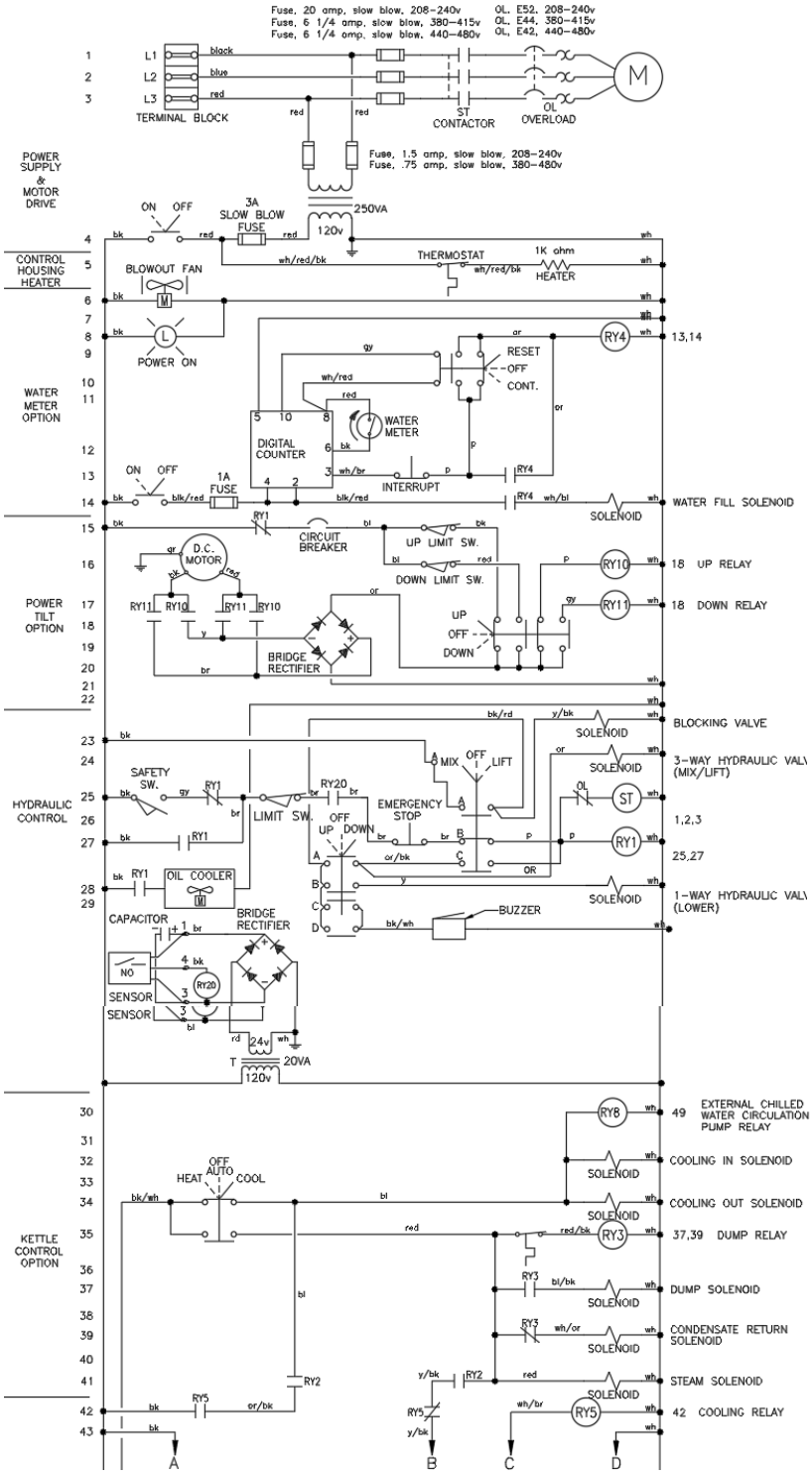

MAINTAINED, MAINTAINED, MOMENTARY

SWITCH	#1	#2	
CLOSED	O	X	
HOLD	O	O	
JOG TO OPEN	X	O	
CONTACT			

X = CLOSED
O = OPEN

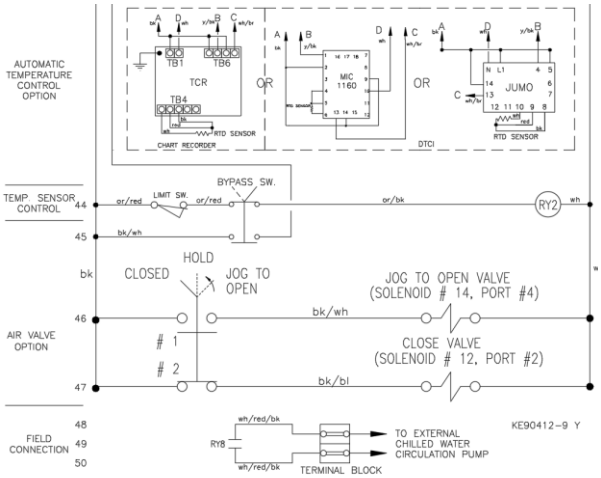

MKDL-T or MKDL-CC HEAT/COOL WITH CONTROL & OIL COOLER

MKDL-T or MKDL-CC HEAT/COOL WITHOUT CONTROL

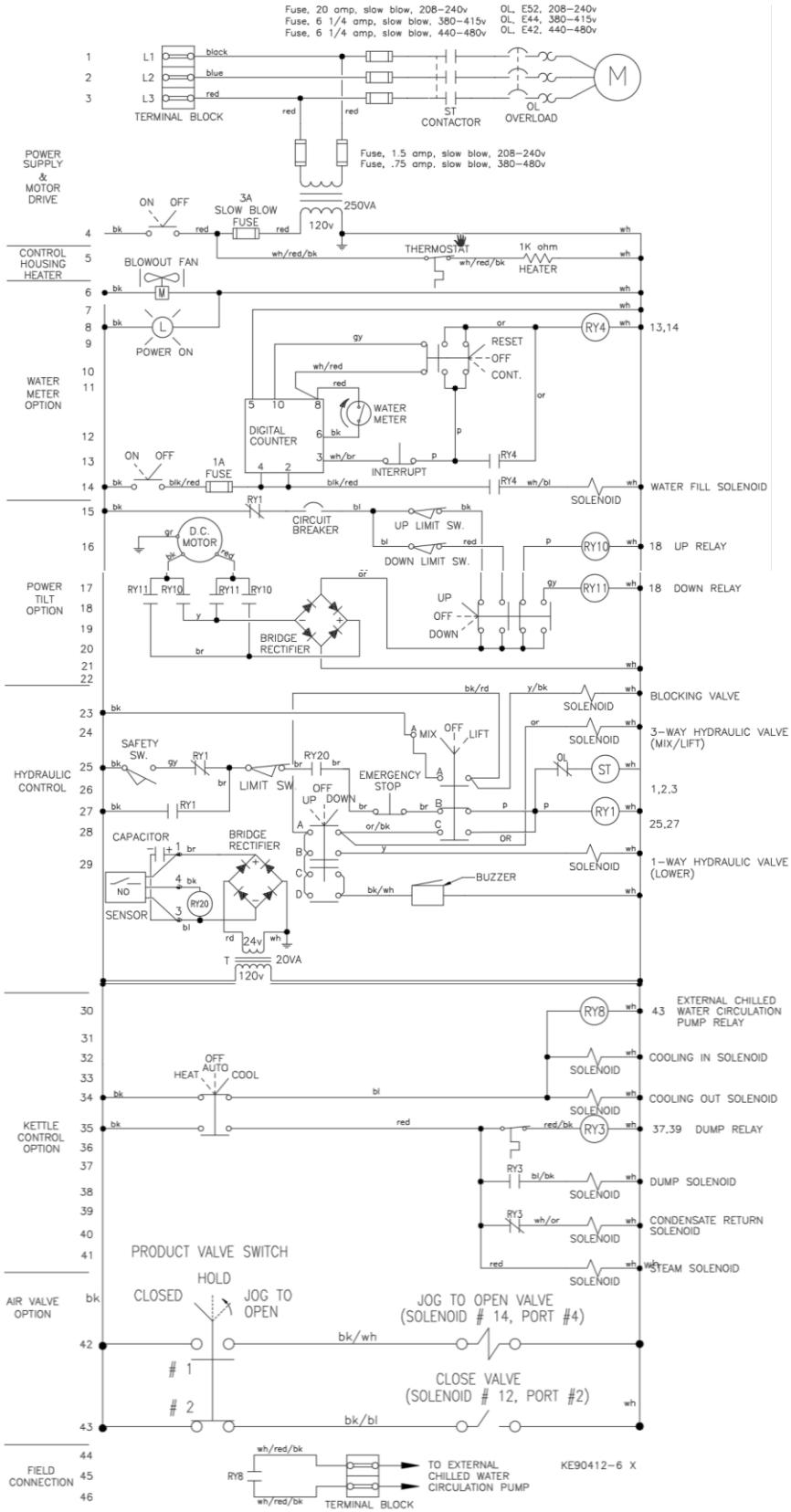

MKDL–T or MKDL–CC HEAT/COOL WITHOUT CONTROL

MAINTAINED,	MAINTAINED,	MOMENTARY
SWITCH	#1	#2
CLOSED	O	X
HOLD	O	O
JOG TO OPEN	X	O
CONTACT		

X = CLOSED
O = OPEN

TMKDL-T or TMKDL-CC HEAT/COOL WITHOUT CONTROL

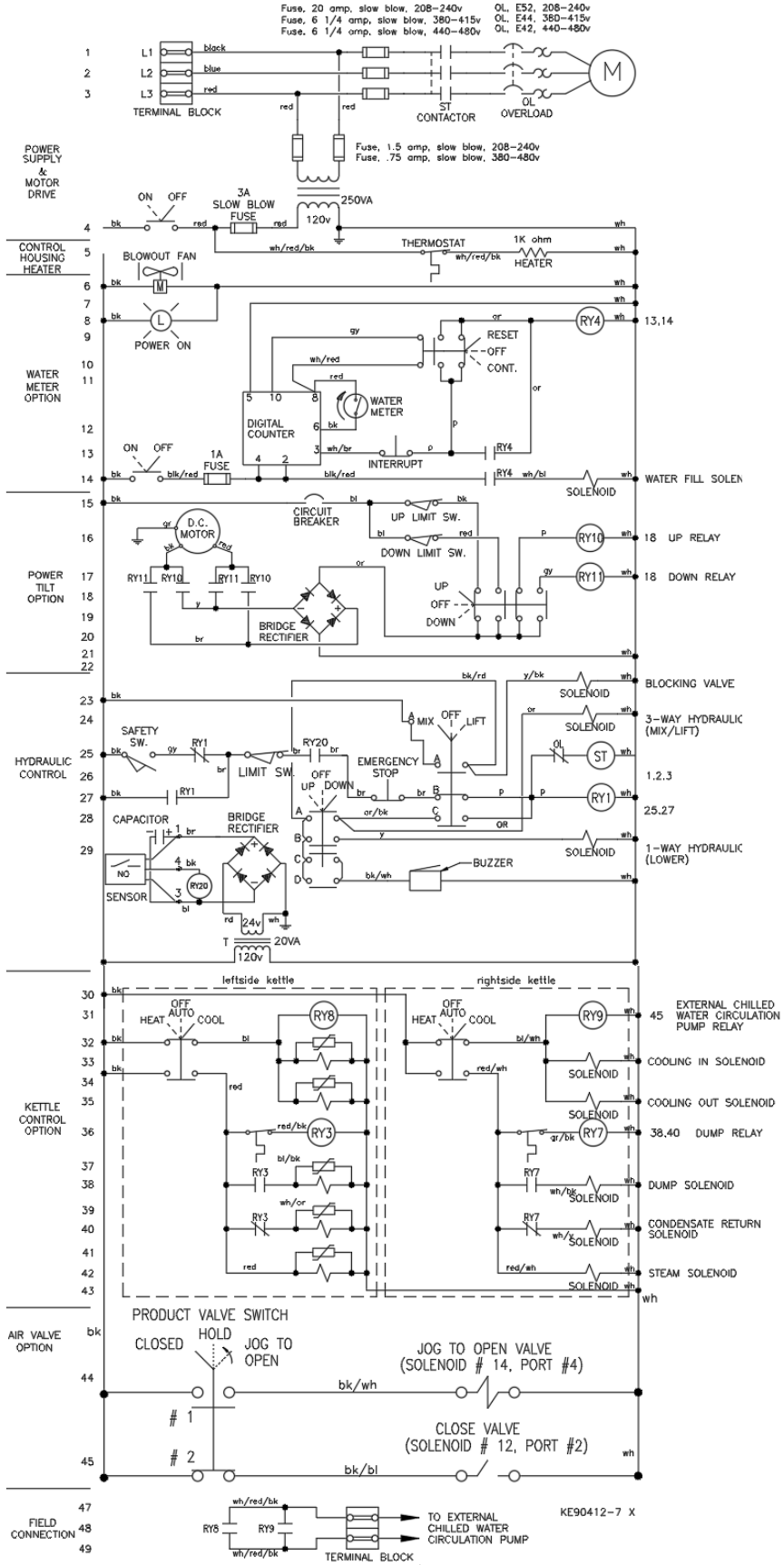

TMKDL-T or TMKDL-CC HEAT/COOL WITHOUT CONTROL

MAINTAINED, MAINTAINED, MOMENTARY

SWITCH	#1	#2	
CLOSED	O	X	
HOLD	O	O	
JOG TO OPEN	X	O	
CONTACT			

X = CLOSED
O = OPEN

MKDL-T or TMKDL-T HEAT WITHOUT CONTROL

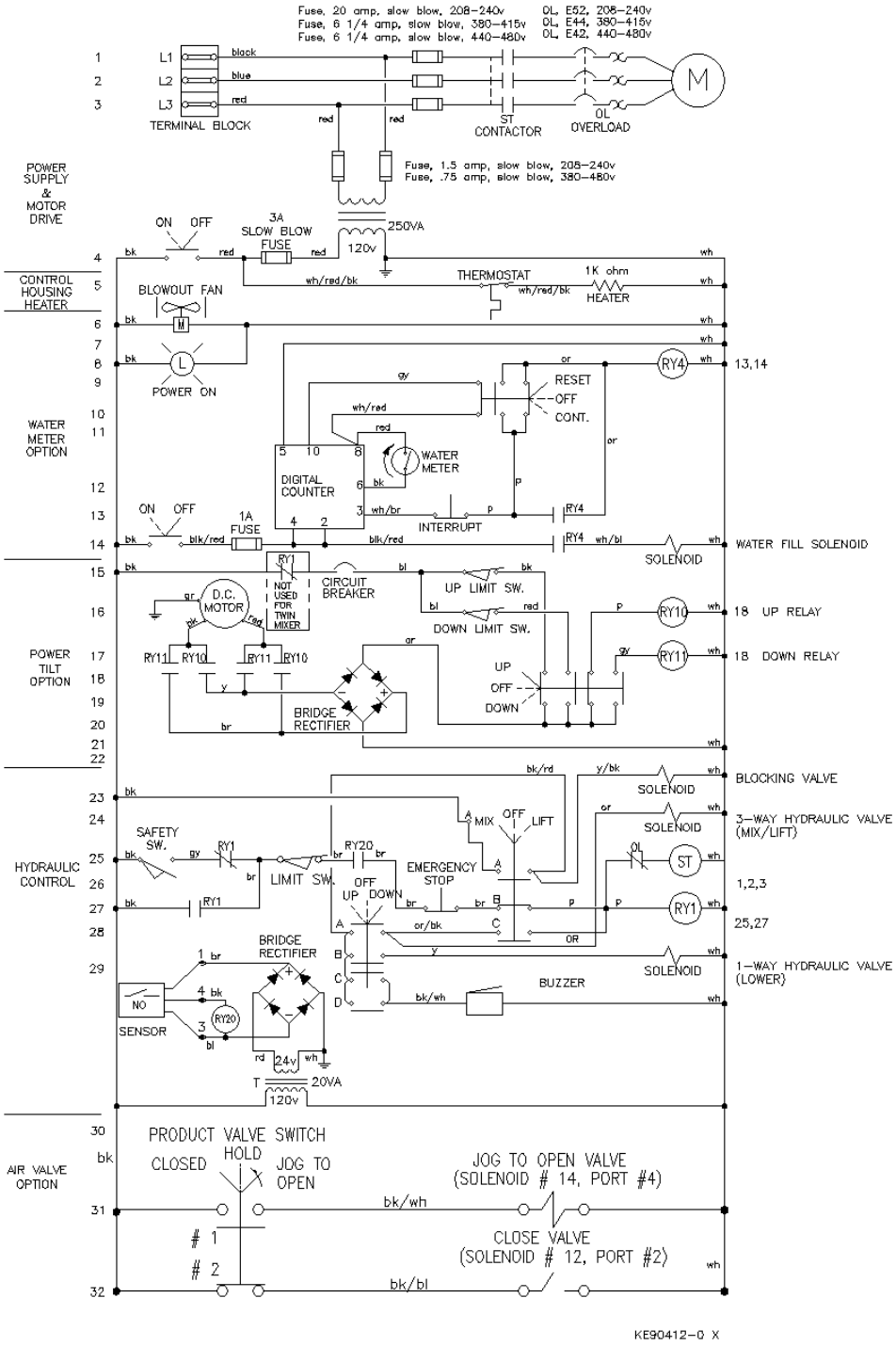

MKDL–T or TMKDL–T HEAT WITHOUT CONTROL

MAINTAINED, MAINTAINED, MOMENTARY

SWITCH	#1	#2	
CLOSED	O	X	
HOLD	O	O	
JOG TO OPEN	X	O	
CONTACT			

X = CLOSED
O = OPEN

Every new piece of Welbilt Foodservice equipment comes with KitchenCare® and you choose the level of service that meets your operational needs from one restaurant to multiple locations

StarCare – Warranty & life–me service, certified OEM parts, global parts inventory, performance audited

ExtraCare — CareCode, 24/7 Support, online/mobile product information

LifeCare – Install & equipment orientation, planned maintenance, KitchenConnect™, MenuConnect®

Talk with KitchenCare® • 1-844-724-CARE • www.mtwkitchencare.com

WELBILT an Ali Group Company
KitchenCare

To learn how Welbilt Foodservice and its leading brands can equip you, visit our global web site at www.welbilt.com, then discover the regional or local resources available to you.

©2025 Welbilt Foodservice except where explicitly stated otherwise. All rights reserved. Continuing product improvement may necessitate change of specification without notice.